Forged Floating & Trunnion-Mounted Ball Valves

Installation, operation & maintenance manual

www.zavero.com

Index

1.0 General information

All informations contained in this manual can be applied to all valves manufactured by ZA.VE.RO.srl.

Instruction Operating Manual show as standard seal material o-ring and graphite.
In case valves are purchased with lip-seal please contact:

service@zavero.com

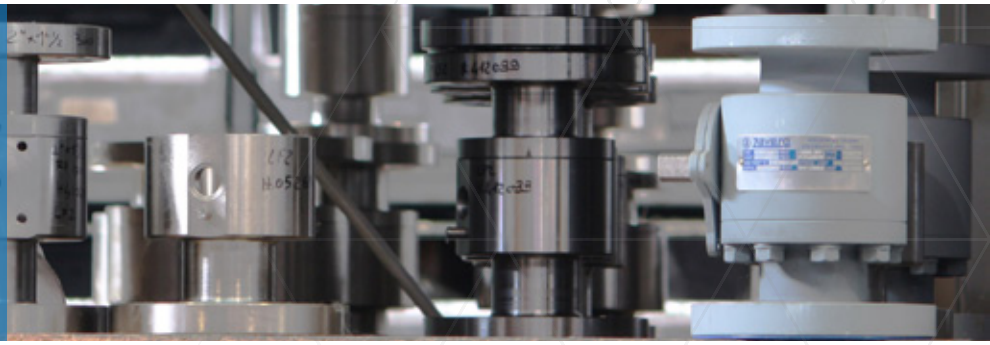

Before starting, be sure that the valves do not contain dangerous liquids or gas and check that there is no pressure in the line.

• Installation, assembly, disassembly and maintenance do not require special tools.

• During the assembly phase, all the valve components shall be clean and lubricated with normal mineral oil to avoid any malfunction caused by external impurity.

• We suggest periodic inspection of the stem gaskets.

• In case of little stem leakage, it is recommended to tighten the nuts under the lever to increase, without exceed, the compression on the stem gaskets.

• The valve shall be installed and shall operate only in accordance with the applicable Pressure Rating, Temperature Design and Data Sheets.

• After installation, be sure that the pipe line don't make mechanical stress to the valve connections. This could compromise the correct valve operations and make leakages.

• For most part of these maintenances and repairs is sufficient an intervention on the working-place. For bigger intervention we suggest you to send the material back to the factory for an inspection and/or rework.

• In case of hot fluids use, please don't touch the valve without hand protection glove.

• For installation and uninstallation please be sure to:

- Use proper tools

- valve is correctly connected to the line and the arrow flow direction (where present) coincide with flow direction of the line.

• For installation please remove all protection plugs, clean the connection part with compressed air or water for clean any possible traces of dust.

• Check and needle valves must always installed in the direction indicated by the arrow on the body.

• The flange connection must be installed with the same complementary flanges (i.e.: RF with RF, RTJ with RTJ etc.)

2.0 Storage

Valves must be stored drained from every elements in a dry and clean area with connections protected by grease or special oils and plastic caps.

We suggest to store valves on pallets or supports but far from the ground contact.
Valves must be always stored in open position.
It's suggest for used or tested valves to put inside the bore a sealant bag to decrease the humidity inside the valve.
Valves without the steel-foots must be stored in vertical position.
When valves are stored for a longer period, or assembled in the pipeline but not yet used until project is finished, they should be visually check on a regular basis. Also valves installed in the pipeline, but not yet used for the process as defined in the Valve Datasheets, should be protected against any debris and/or corrosion inside the valve.

2.1 Install operating instruction

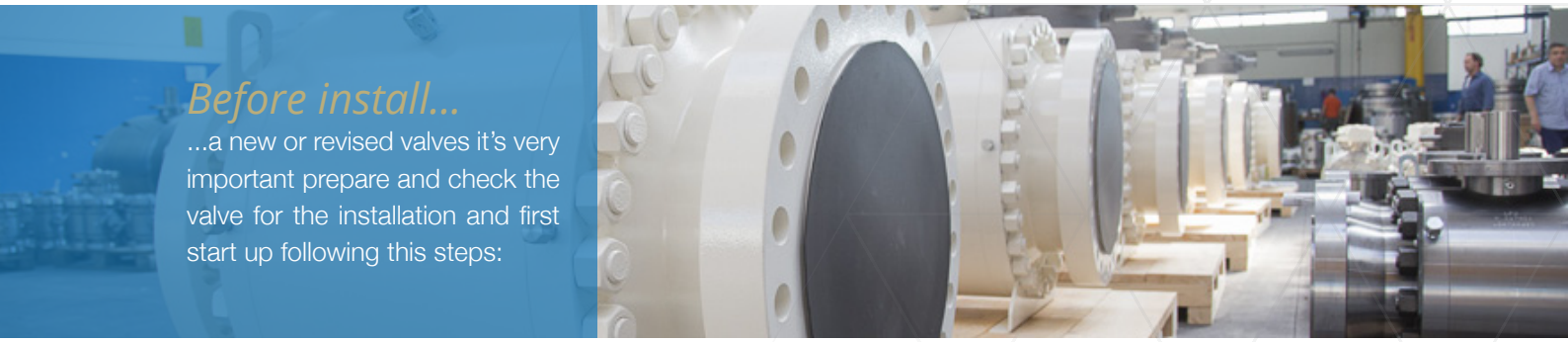

Before install...

...a new or revised valves it's very important prepare and check the valve for the installation and first start up following this steps:

1. Remove from the valve the plastic caps. Valves without actuators always are supplied in open position
2. Check that inside the valves there is no sealant bags or unidentified object
3. Clean the bore of the valves from dust and the connections
4. We suggest to execute a functional test (open close) for a correct installation.
5. Check (if present) vent valve and drain closure
6. Check there is no pressure inside piping and or machinery is not working
7. Prepare valves for connections with oil or grease on the flange
8. Lift the valves by hand or by lifting lugs if valve is provided.
9. Connect the valve like project requisition

2.2 Uninstall operating instruction

Before unistall...

...a valve from piping or machinery is very important follow this steps:

1. Check there is no pressure inside valves or piping or machinery.
2. Check valves must be in open position. (For actuated valves fail close we suggest to empty the pipe with valves open and, after drain, cut off the power.
3. Open vent valve and drain valve before remove and wait for empy the valve.
4. Fix valve to lifting lugs or by hand depending from dimension and take in traction for the weight of the valve.
5. Start to disconnect one side of the valve, then proceed with the other (during this operation is important to follow the lift of the valve with the same weight to avoid structural damages to the connections.
6. Lift up the valve disconnected.
7. Half open the ball of the valve and clean everything have not been drained.
8. When valve is fully drained and clean, fully open the valve and protect connections and inside of the valve with plastic covers.
9. Valves must be stored in a clean and dry area (see chapter 2.0 of this manual).

2.3 Handling & lifting requirements

Caution

For valve handling and/or lifting, the lifting equipment (fasteners, hook, etc.) must be sized and selected while taking into account the valve weight indicated in the packing list and/or delivery note.

Lifting and handling must be made only by qualified personnel.

Do not use the lifting points on the actuator, if any, to lift the valve. These lifting points are for actuator only.

Caution must be taken during the handling to avoid that this equipment passes over the workers or over any other place where a possible fall could cause damage. In any case the local safety regulations must be respected.

Packed valves

Crates: lifting and handling of the packed valves in crates will be carried out by a fork lift truck, by means of the appropriate fork hitches.

Cases: the lifting of packed valves in cases should be carried out in the lifting points and at the centre of gravity position which have been marked. The transportation of all packed material must be carried out safely and following local safety regulations.

Unpacked valves

1.The lifting and the handling of these valves has to be carried out by using appropriate means and by respecting the carrying limits. The handling must be carried out on pallets, protecting the machined surfaces to avoid any damage.

2.With valve of large dimensions, the sling and the hooking of the load must be carried out by using the appropriate tools (brackets, hook, fasteners, ropes) and load balancing tools in order to prevent them from falling or moving during the lifting and handling.

3. Valves without lifting points are usually stored on one side with the connection protected to avoid any damage. Lift the valve from the flange holes by minimum 2 points looking at balancing and let down without drop on a clean surface without projections that could damage the flange connection. *(check catalogue at page 10 to find which type of valve have not the lifting points and foots).*

3.0 Floating ball valve

Art.60/60R/62/62R/90/90R

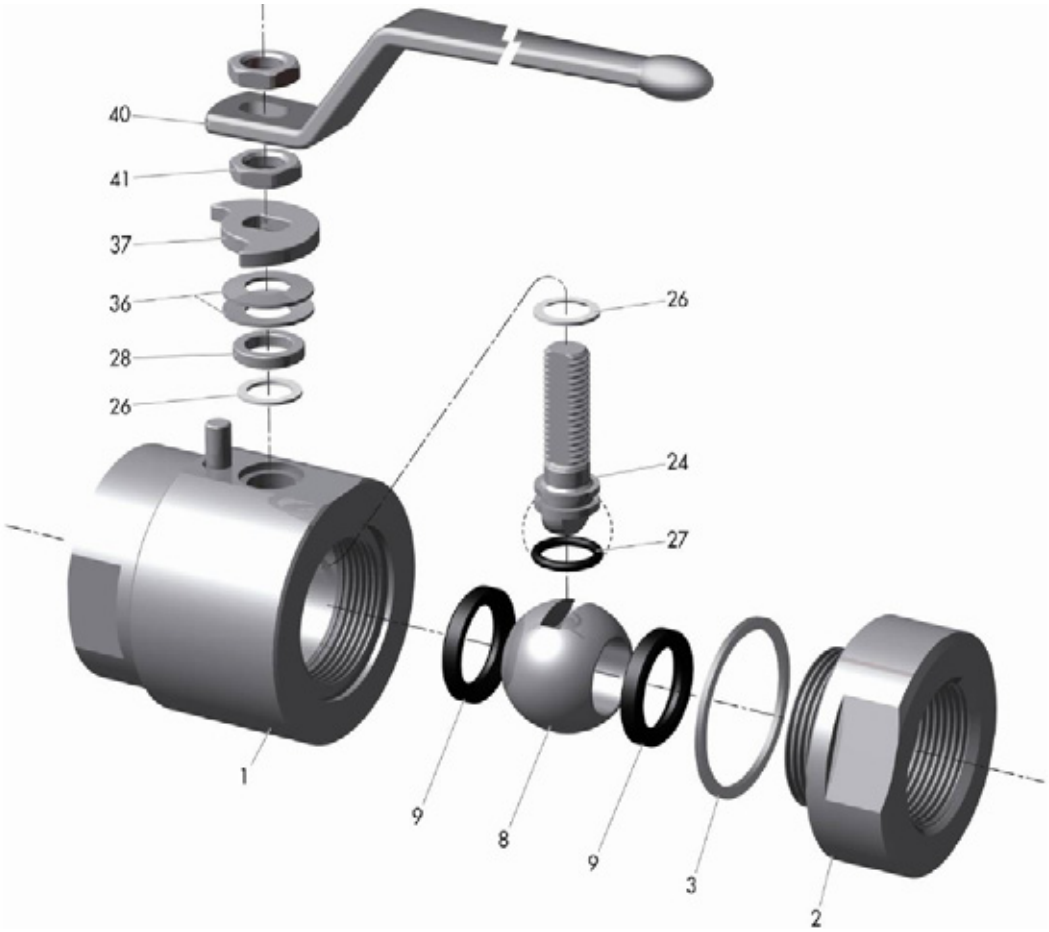

1	Body
2	Closure
3	Closure gasket
4	Closure O-Ring
5	Closure bolt
8	Ball
9	Seat insert
24	Stem
26	Stem gasket
27	Stem O-Ring
28	Ring
36	Spring washer
37	Stop sector
39	Stop pin
40	Lever
41	Lever nut

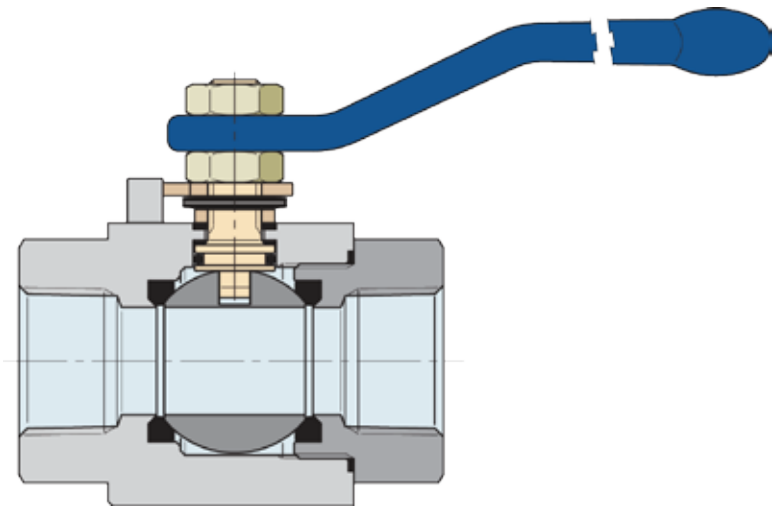

3.1 Disassembly

1. Close the valve
2. Remove the End Connection (2) and gaskets (3).
3. Move the valve lever (40) and incline the body valve to facilitate the ball (8) extraction.
4. Unscrew the top Nut (41), remove the lever and unscrew the lower Nuts (41).
5. Extract the Stop sector system (37), the spring washer (36), the ring (28) and finally the Gaskets (26).
6. Unthread from the inside the Stem (24) and remove the internal gasket (26).
7. Remove the Seats (9) from the respective seat support
8. Check the components integrity and condition (Seals, O-rings, Seats, Ball, Stem) and when necessary, change those damaged.

3.2 Assembly

For the assembly, repeat the sequence in the opposite way and take care to clean and lubricate all the parts with mineral oil or grease compatible with the pipeline fluid / gas.

3.3 Disassembly for metal seat version

1. Close the valve
2. Remove the End Connection (2) and gaskets (3).
3. Move the valve lever (40) and incline the body valve to an easy ball (8) extraction.
4. Unscrew the top Nut (41), remove the lever and unscrew the lower Nuts (41).
5. Extract the Stop sector system (37), the spring washer (36), the ring (28) and finally the Gaskets (26).
6. Unthread from the inside the Stem (24) and remove the internal gasket (26).
7. (See figure 7) extract the Seat ring (2), and the spring washer (20) from the respective seat support
8. Check the components integrity and condition (Seals, O-rings, Seats, Ball, Stem) and when necessary, change those damaged.

3.4 Assembly for metal seat version

For the assembly, repeat the sequence in the opposite way and take care to clean and lubricate all the parts with mineral oil or grease compatible with the pipeline fluid / gas.

Note

On ***Metal Seat*** Version, are not present the Soft Inserts (9), because the contact point between Seat Ring and Ball is Metallic with Tungsten Carbide hard surface.

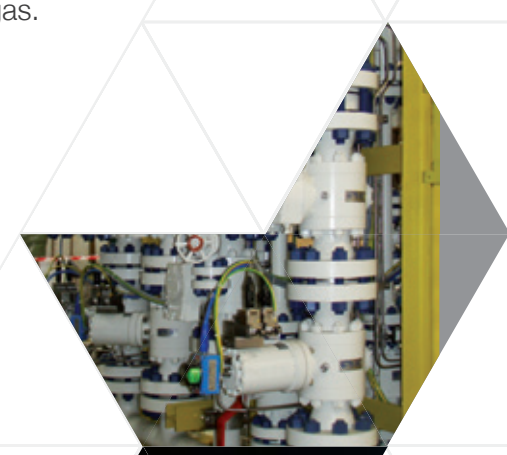

4.0 Floating ball valve flanged

Art.75/75R/22/22R/DBB

1	Body
2	Closure
3	Closure gasket
4	Closure O-Ring
5	Closure bolt
8	Ball
9	Seat insert
24	Stem
26	Stem gasket
27	Stem O-Ring
28	Ring
36	Spring washer
37	Stop sector
39	Stop pin
40	Lever
41	Lever nut

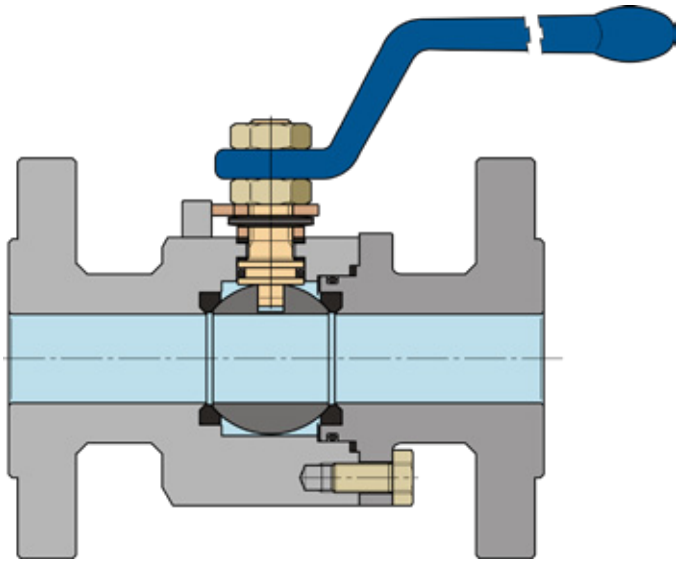

4.1 Floating ball valve flanged

Art.75/75R/22/22R/DBB

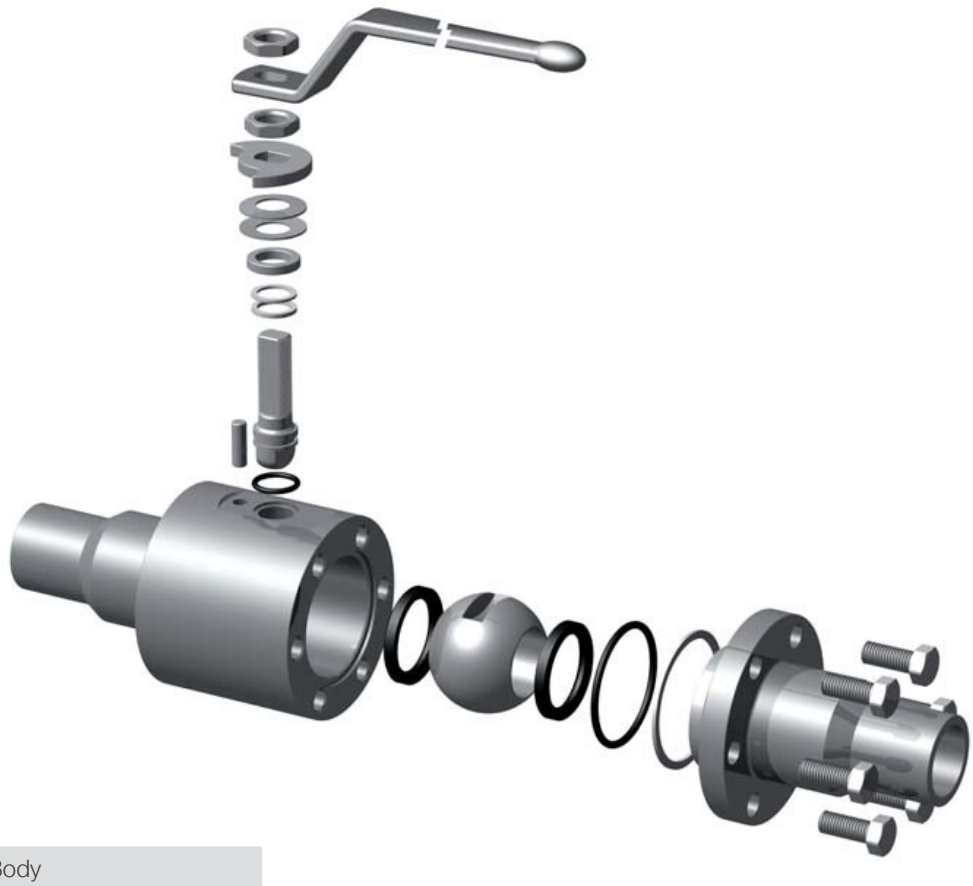

1	Body
2	Closure
3	Closure gasket
4	Closure O-Ring
5	Closure bolt
8	Ball
9	Seat insert
24	Stem
26	Stem gasket
27	Stem O-Ring
28	Ring
36	Spring washer
37	Stop sector
39	Stop pin
40	Lever
41	Lever nut

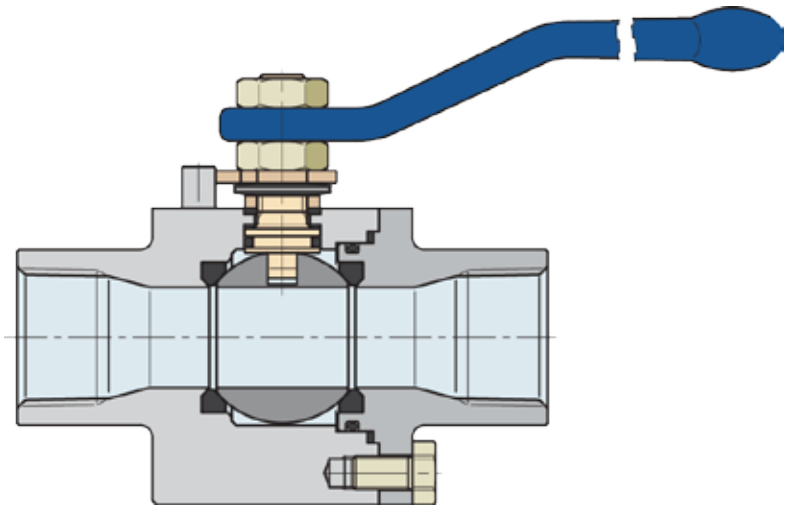

4.2 Disassembly

1. Close the valve.
2. Remove the end Connection (2) by the Bolts (5) and gaskets (3).
3. Move the valve lever (40) and incline the body valve for facilitate the ball (8) extraction.
4. Unscrew the top Nut, remove the lever and unscrew the lower Nuts (41).
5. Extract the Stop sector system (37), the spring washer (36), the ring (28) and finally the Gaskets (26).
6. Unthread from the inside the Stem (24) and remove the internal gasket (26).
7. Remove the Seats (9) from the respective seat support
8. Check the components integrity and condition (Seals, O-rings, Seats, Ball, Stem) and when necessary, change those damaged.

4.3 Assembly

For the assembly, repeat the sequence in the opposite way and take care to clean and lubricate all the parts with mineral oil or grease compatible with the pipeline fluid / gas .

Reccomended Lubricant: Grease MOLYGUARD MOLY TEF or Grease AUDCO 733X or VANGUARD TEKA 2.

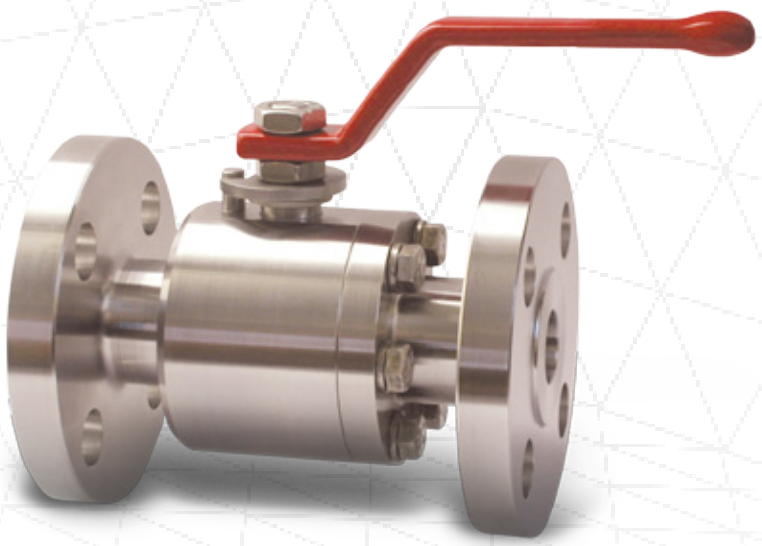

5.0 Floating ball valve bare stem

Art. 60/60R/62/62R/90/90R/75/75R/22/22R/DBB

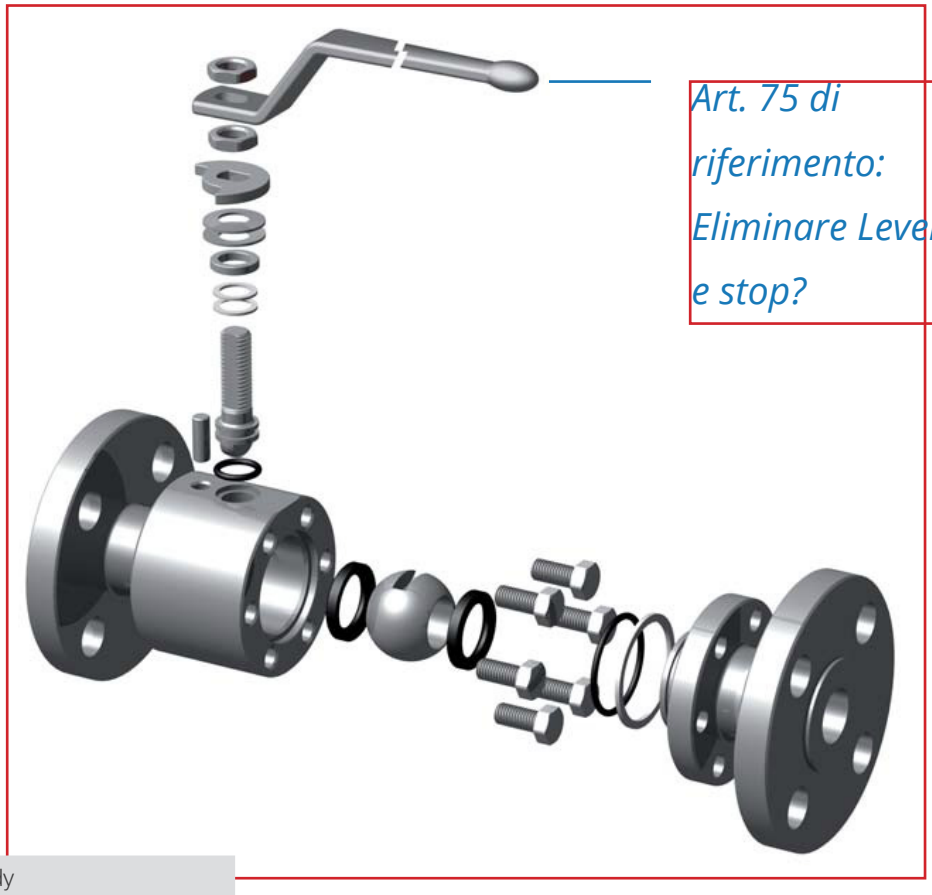

Art. 75 di riferimento: Eliminare Lever e stop?

1	Body
2	Closure
3	Closure gasket
4	Closure O-Ring
5	Closure bolt
8	Ball
9	Seat insert
24	Stem
26	Stem gasket
27	Stem O-Ring
28	Ring
36	Spring washer
37	Stop sector
39	Stop pin
40	Lever
41	Lever nut

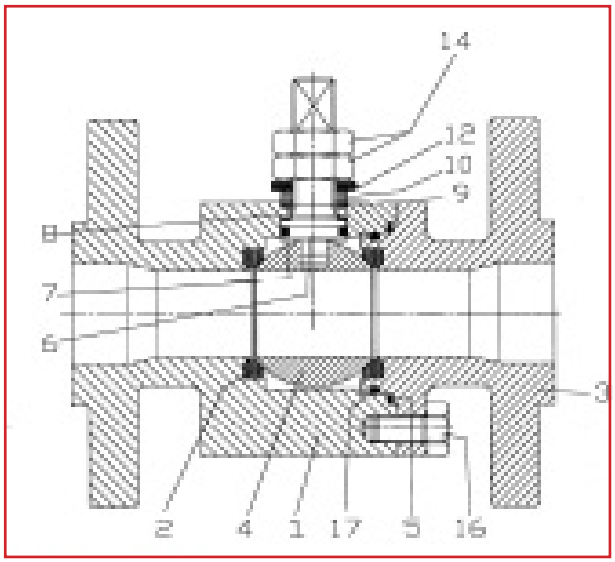

5.1 Disassembly

1. Close the valve
2. Remove the end Connection (3) by the Bolts (16) and gaskets (5).
3. Move the valve stem (6) and incline the body valve for facilitate the ball (4) extraction.
4. Unscrew the two Nuts (14), extract the springs washer (12), the ring (10) and finally the Gaskets (9).
5. Unthread from the inside the Stem (6) and remove the internal gasket (8).
6. Remove the Seats (2) from the respective seat support.
7. Check the components integrity and condition (Seals, O-rings, Seats, Ball, Stem) and when necessary, change those damaged.

5.2 Assembly

For the assembly, repeat the sequence in the opposite way and take care to clean and lubricate all the parts with mineral oil or grease compatible with the pipeline fluid / gas. Reccomended Lubricant: Grease MOLYGUARD MOLY TEF or Grease AUDCO 733X or VANGUARD TEKA 2

6.0 Floating ball valve metal seat

Art.75/75R/22/22R/DBB

Art. 75 di riferimento: modifica esploso per metal seat ?

1	Body
2	Closure
3	Closure gasket
4	Closure O-Ring
5	Closure bolt
8	Ball
9	Seat insert
24	Stem
26	Stem gasket
27	Stem O-Ring
28	Ring
36	Spring washer
37	Stop sector
39	Stop pin
40	Lever
41	Lever nut

Art. 75 di riferimento: aggiungere metal seat

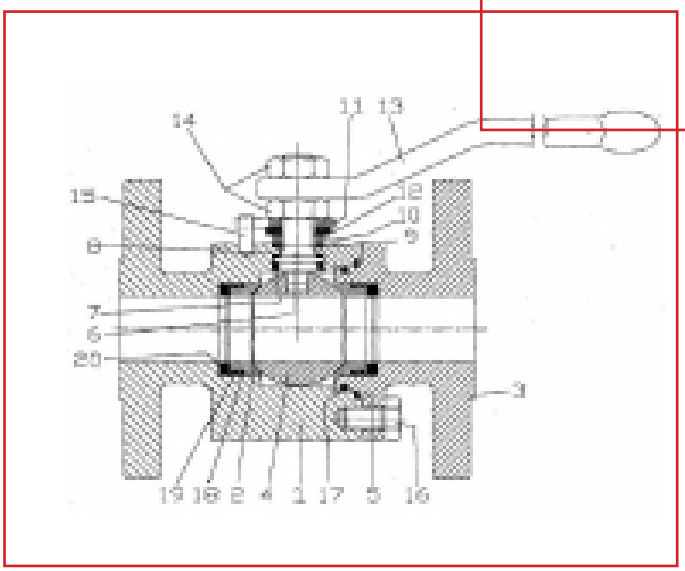

6.1 Disassembly

1. Remove the end Connection (3) by the Bolts (16) and gaskets (5).
2. Move the valve lever (13) and incline the body valve for an easy ball (4) extraction.
3. Unscrew the top Nut (14), remove the lever and unscrew the lower Nuts (14).
4. Extract the Stop sector system (11), the spring washer (12), the ring (10) and finally the Gaskets (9).
5. Unthread from the inside the Stem (6) and remove the internal gasket (8).
6. Remove the Seat Ring (2), and the spring washer (20) from the respective seat support
7. Check the components integrity and condition (Seals, O-rings, Seats, Ball, Stem) and when necessary, change those damaged.

6.2 Assembly

For the assembly, repeat the sequence in the opposite way and take care to clean and lubricate all the parts with mineral oil or grease compatible with the pipeline fluid / gas. Reccomended Lubricant: Grease MOLYGUARD MOLY TEF or Grease AUDCO 733X or VANGUARD TEKA 2

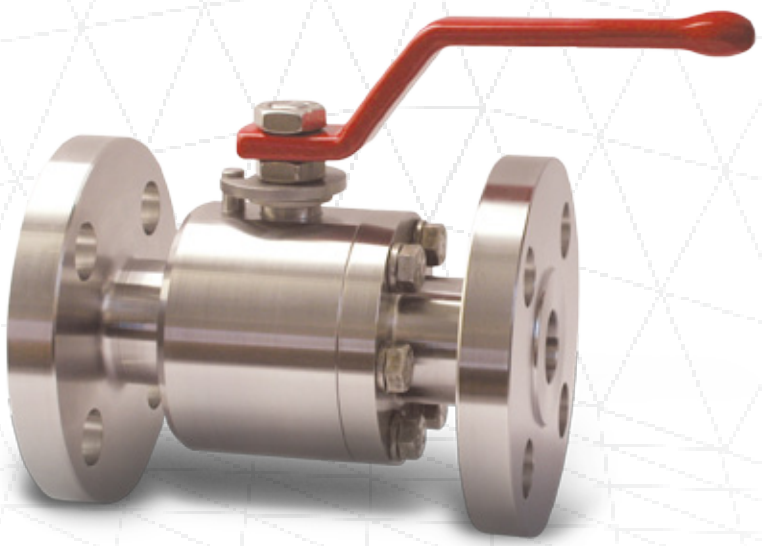

7.0 Trunnion ball valve

Art 85/85R/DBB

Note

On ***Metal Seat*** Version, are not present the Soft Inserts (9) because the contact point between Seat Ring and Ball is Metallic with Tungsten Carbide hard surface.

Mantenere o meno il blu evidenziato per "Recomended spare parts"?

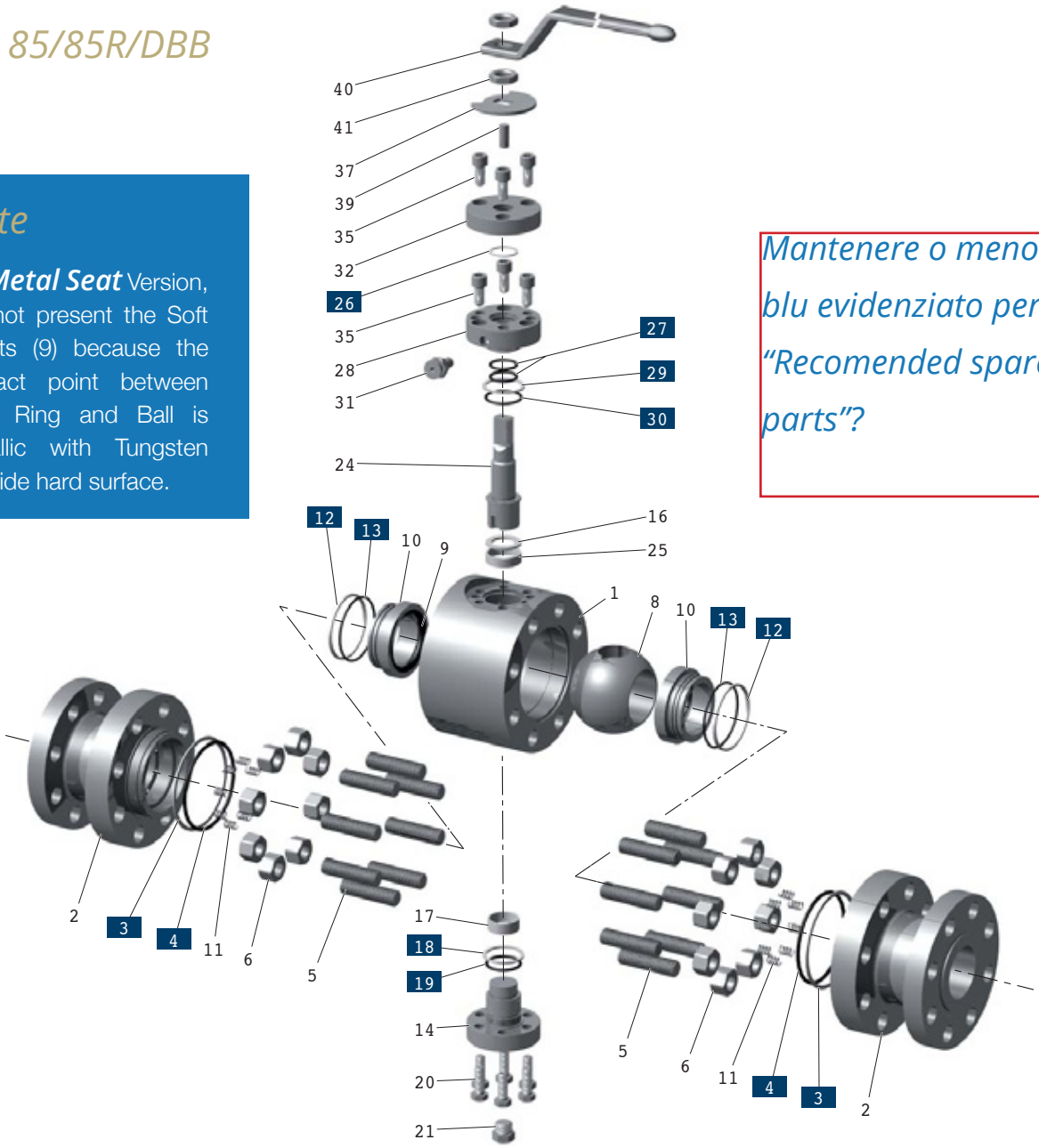

1	Body	13	Seat O-Ring	27	Stem O-Ring
2	Closure	14	Trunnion	28	Gland flange
3	Closure gasket	16	Thrust washer	29	Gland flange gasket
4	Closure O-Ring	17	Shell bearing	30	Gland flange O-Ring
5	Closure stud	18	Trunnion gasket	31	Stem grease injector
6	Closure nut	19	Trunnion O-Ring	32	Operator flange
8	Ball	20	Trunnion bolt	35	Flanges screw
9	Seat insert	21	Drain plug	37	Stop sector
10	Seat ring	24	Stem	39	Stop pin
11	Seat spring	25	Shell bearing	40	Lever
12	Seat gasket	26	Stem gasket	41	Lever nut

7.1 Disassembly

1. Close the valve
2. Remove the end Connection (2) by the Bolts (5-6) and gaskets (3).
3. Remove the seats support (10) and the springs (11).

Operate up to this point for Seats maintenance only. For a complete disassembly of the valve, from this point remove the Nuts (41), the lever (40), the stop sector ring (37).

4. Unscrew the nuts (35) and remove the Cover (32), unscrew the nuts (35) and remove the gland flange (28) the gasket (29) and the ring (30).
5. Unscrew the nuts (20) and remove the trunnion (14) the gasket (18) and the ring (19). During this operation hold the ball (8).
6. Remove the Ball (8) from the inside, the upper ring (16-25), the Stem (24).
7. Check the components integrity and condition (Seals, O-rings, Seats, Ball, Stem) and when necessary, change those damaged.

7.2 Assembly

For the assembly, repeat the sequence in the opposite way and take care to clean and lubricate all the parts with mineral oil or grease compatible with the pipeline fluid / gas. Reccomended Lubricant: Grease MOLYGUARD MOLY TEF or Grease AUDCO 733X or VANGUARD TEKA 2.

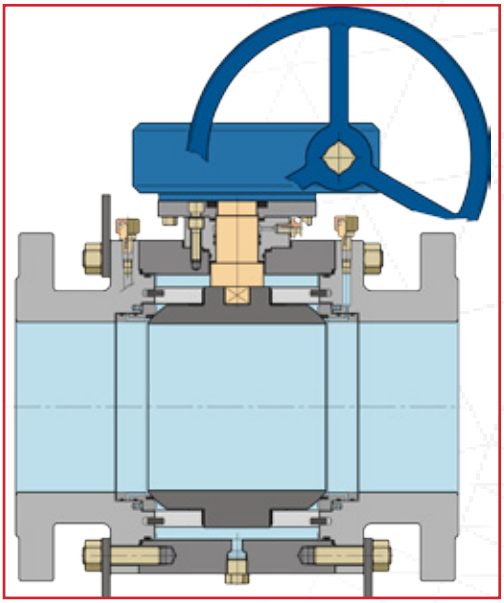

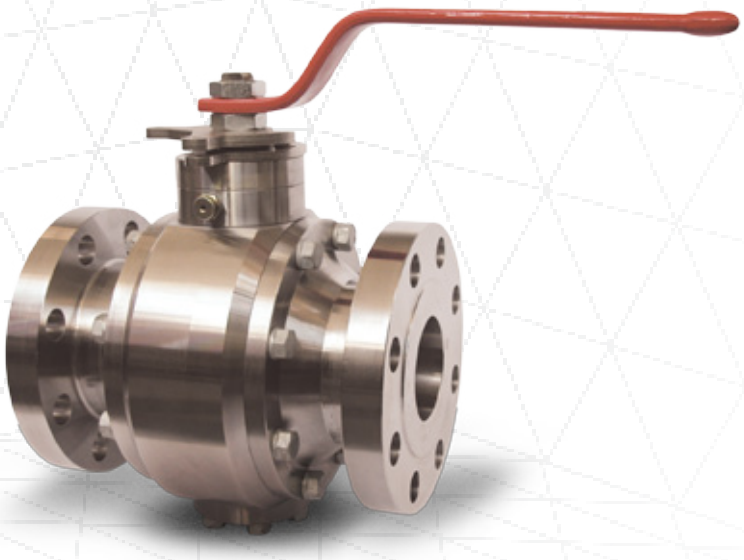

8.0 Trunnion ball valve plates construction

Art 85 DN 10"- bigger & DBB type

Note

On ***Metal Seat*** Version, are not present the Soft Inserts (9) because the contact point between Seat Ring and Ball is Metallic with Tungsten Carbide hard surface.

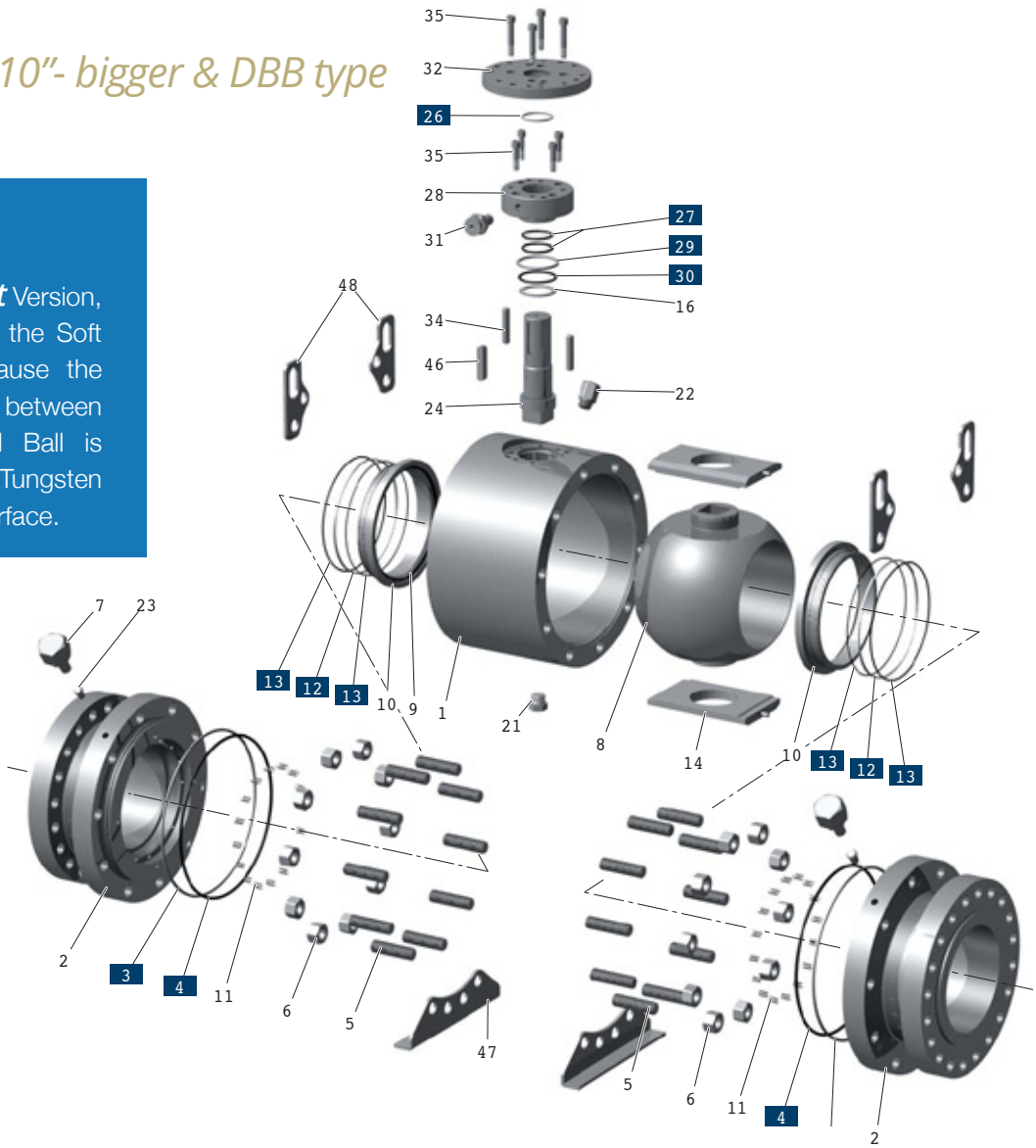

1	Body
2	Closure
3	Closure gasket
4	Closure O-Ring
5	Closure stud
6	Closure nut
7	Seat grease injector
8	Ball
9	Seat insert
10	Seat ring
11	Seat spring

12	Seat gasket
13	Seat O-Ring
14	Support Plate
16	Thrust washer
21	Drain plug
22	Vent bleeder
23	Check valve
24	Stem
26	Stem gasket
27	Stem O-Ring

28	Gland flange
29	Gland flange gasket
30	Gland flange O-Ring
31	Stem grease injector
32	Operator flange
34	Pin
35	Flanges screw
46	Stem key
47	Foot
48	Lifting lug

8.1 Disassembly

1. Close the valve and put it in vertical position on one connection end (2) to get an easy work.
2. Remove the Stud Nut (5-6), remove foots (47) and lifting lugs (48), remove the connection end (2) and the seats (10) from one side of valve and gently
3. Remove the seat support (10) and the springs washers (11) from connection end (2) This operation is the same for each connection end (2) side
4. For complete disassembling of the valve, from this point to remove the gear box, remove the bolting (35) and the operator flange (32)
5. Remove the Operator Screw (35) then extract the gland Flange (28), then extract the stem (24)
6. Remove the ball (8) from internal together with the plates (14) be careful of plate thorns (15)
7. Now you can remove the second seat ring fitted on body seat area in the same way of the connection end over: extract the seat ring (10) and the spring washers (11)
7. To check the condition and integrity of all the soft parts (seat, O-Ring, seals, ball, stem) and to replace the damaged ones, if necessary.

8.2 Assembly

For the assembly, repeat the sequence in the opposite way and take care to clean and lubricate all the parts with mineral oil or grease compatible with the pipeline fluid / gas. Reccomended Lubricant: Grease MOLYGUARD MOLY TEF or Grease AUDCO 733X or VANGUARD TEKA 2

Note

For second side of the ***Double Block and bleed*** valve rotate the valve on the side to be disassembled and proceed from step 1 to 7.

Aggiungere una pagina per rappresentare le DBB in sezione complete di tabella componenti? cap 8.3 ?

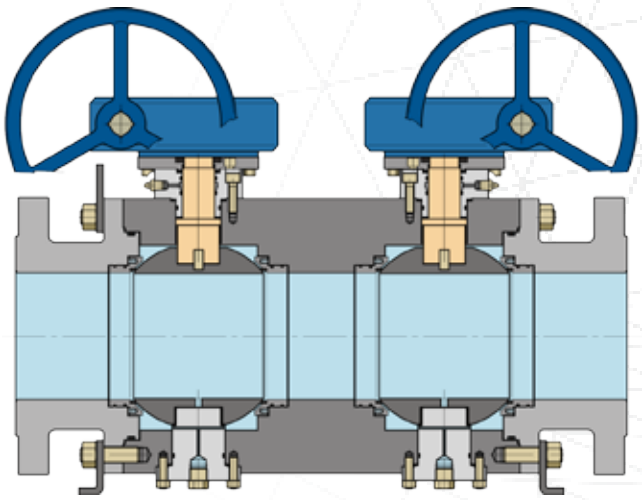

9.0 Floating cryogenic ball valve flanged

Art 175/175R

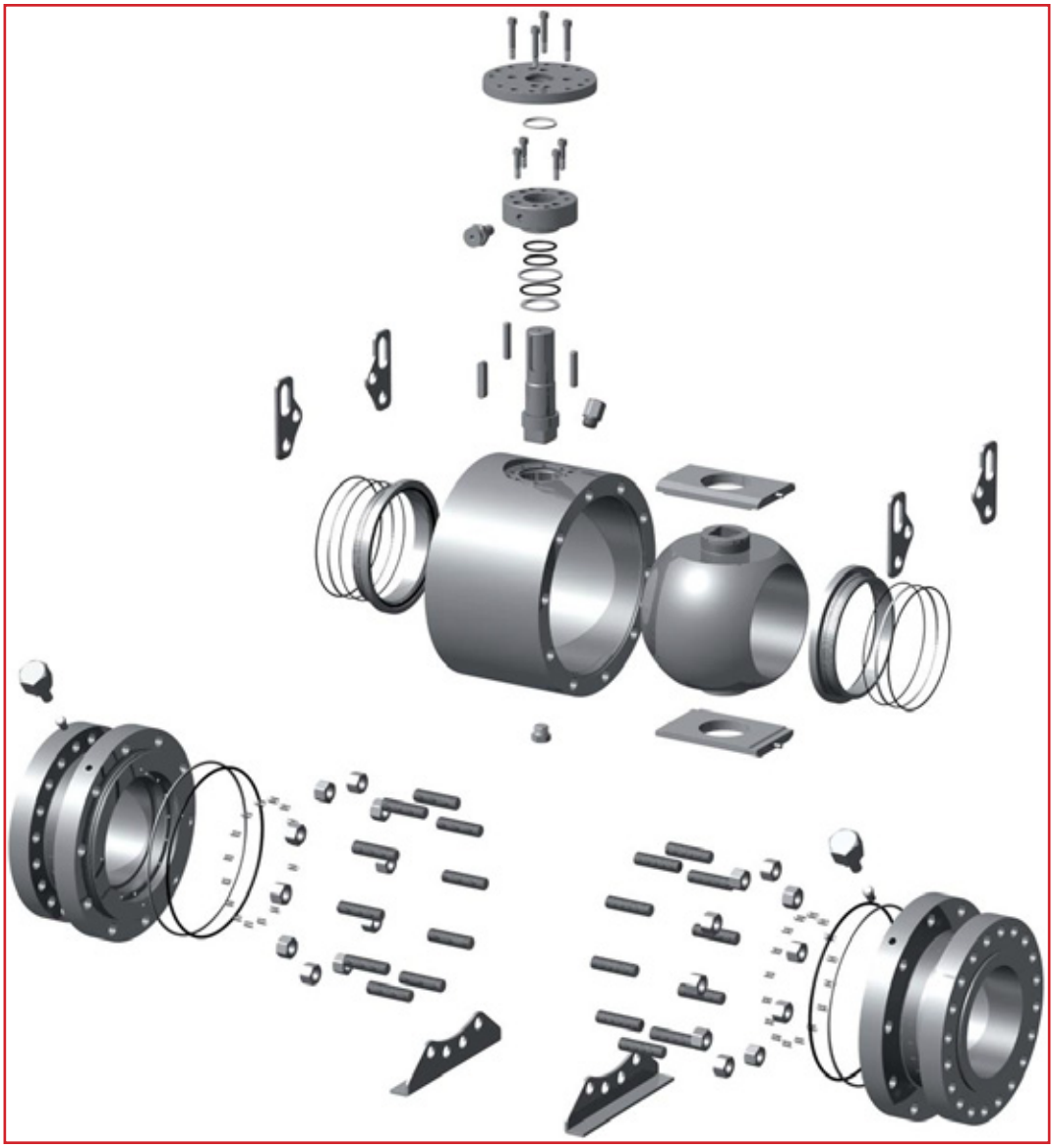

1	Recommended spare parts	27	10 Seat ring	20 Trunnion bolt
2	1 Body	28	11 Seat spring	21 Drain plug
3	2 Closure	36	12 Seat gasket	24 Stem
4	3 Closure gasket	37	13 Seat O-Ring	25 Shell bearing
5	4 Closure O-Ring	39	14 Trunnion	26 Stem gasket
8	5 Closure stud	40	16 Thrust washer	27 Stem O-Ring
9	6 Closure nut	41	17 Shell bearing	28 Gland flange
24	8 Ball		18 Trunnion gasket	29 Gland flange gasket
26	9 Seat insert		19 Trunnion O-Ring	30 Gland flange O-Ring

9.1 Disassembly

1. Close the valve
2. Unscrew the bolts (41) and extract the lever (40), unscrew the second nut
3. Extract the Stop sector system (37), the spring washer (36), the ring (28) and finally the Gaskets (26).
4. Remove bolt (35) and extract the gland flange (32) with the stem extension (58) and seals
5. Remove the bolts (43) and lift up the bonnet. (From this step is like a normal floating valve)
6. Unscrew the 2 nuts of the stem, the spring washer (36), the ring (28) and finally the Gaskets (26).
7. Remove the end Connection (2) by the Bolts (5) and gaskets (3).
8. Move the valve lever (40) and incline the body valve for facilitate the ball (8) extraction.
9. Unthread from the inside the Stem (24) and remove the internal gasket (26).
10. Remove the Seats (9) from the respective seat support.
11. Check the components integrity and condition (Seals, O-rings, Seats, Ball, Stem) and when necessary, change those damaged.

9.2 Assembly

FFor the assembly, repeat the sequence in the opposite way and take care to clean and lubricate all the parts with mineral oil or grease compatible with the pipeline fluid / gas. Reccomended Lubricant: Grease MOLYGUARD MOLY TEF or Grease AUDCO 733X or VANGUARD TEKA 2.

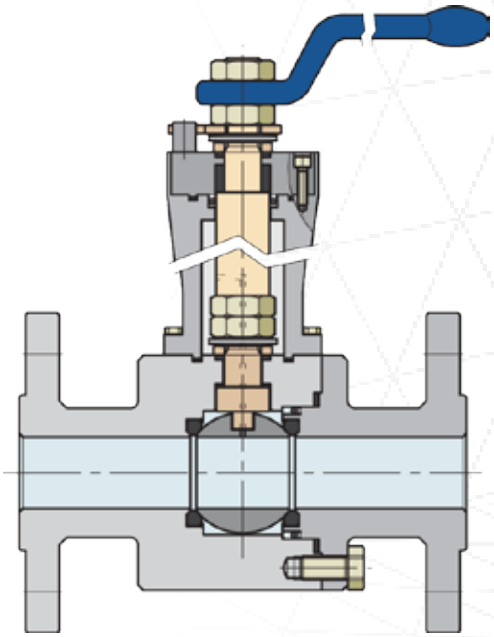

10.0 Trunnion cryogenic ball valve

Art 185/185R with plates 10" & bigger

Note

On ***Metal Seat*** Version, are not present the Soft Inserts (9) because the contact point between Seat Ring and Ball is Metallic with Tungsten Carbide hard surface.

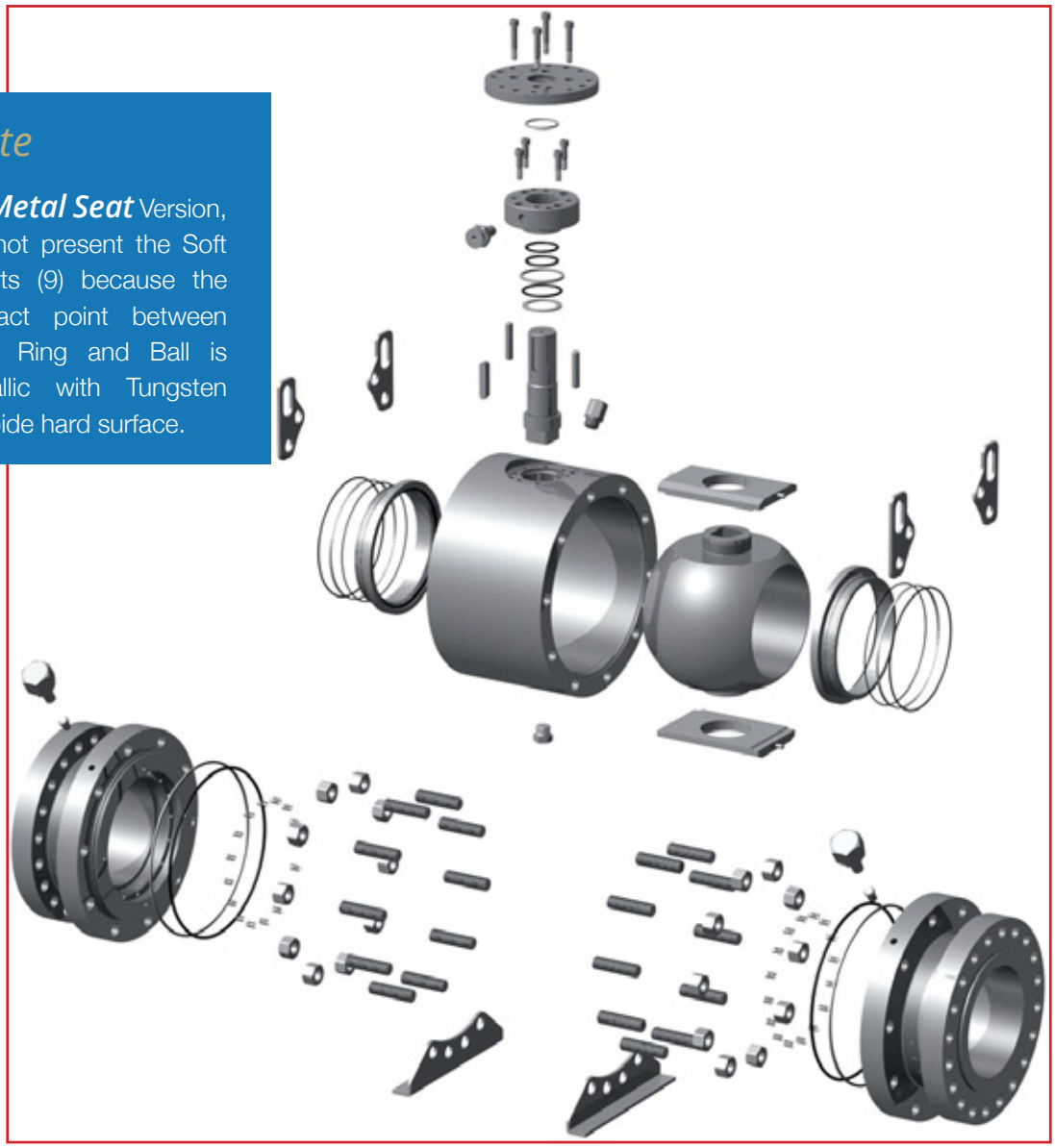

1	Recommended spare parts	27	10 Seat ring	20 Trunnion bolt
2	1 Body	28	11 Seat spring	21 Drain plug
3	2 Closure	36	12 Seat gasket	24 Stem
4	3 Closure gasket	37	13 Seat O-Ring	25 Shell bearing
5	4 Closure O-Ring	39	14 Trunnion	26 Stem gasket
8	5 Closure stud	40	16 Thrust washer	27 Stem O-Ring
9	6 Closure nut	41	17 Shell bearing	28 Gland flange
24	8 Ball		18 Trunnion gasket	29 Gland flange gasket
26	9 Seat insert		19 Trunnion O-Ring	30 Gland flange O-Ring

10.1 Disassembly

1. Close the valve
2. LEVER: remove the Nuts (41), the lever (40), the stop sector ring (37).
2. GEAR: remove gear connection bolts and lift up the gear box, remove the bolts (35) and extract the cover for access at the stem gasket
3. Remove bolts (33), extract the stem extension and then lift the extension bonnet (57)
8. Unscrew the nuts (35) and remove the Cover (32), unscrew the nuts (35) and remove the gland flange (28) the gasket (29) and the ring (30).
9. Put it in vertical position on one connection end (2)
10. Remove the Stud Nut (5-6), remove foots (47) and lifting lugs (48), remove the terminal (2) and the seats (10) from one side of valve and gently Remove the seats support (10) and the springs (11)
7. Remove the ball (8) from internal together with the plates (14)
8. To check the condition and integrity of all the soft parts (seat, O-Ring, seals, ball, stem) and to replace the damaged ones, if necessary.

10.2 Assembly

FFor the assembly, repeat the sequence in the opposite way and take care to clean and lubricate all the parts with mineral oil or grease compatible with the pipeline fluid / gas. Reccomended Lubricant: Grease MOLYGUARD MOLY TEF or Grease AUDCO 733X or VANGUARD TEKA 2.

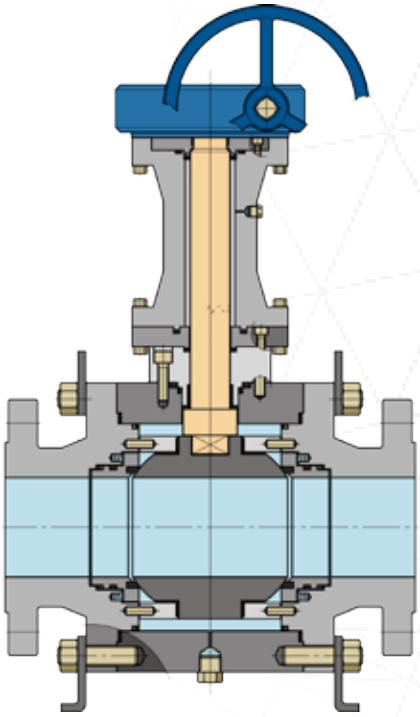

11.0 Trunnion cryogenic ball valve

Art 185 DN 1" to 8"

Note

On ***Metal Seat*** Version, are not present the Soft Inserts (9) because the contact point between Seat Ring and Ball is Metallic with Tungsten Carbide hard surface.

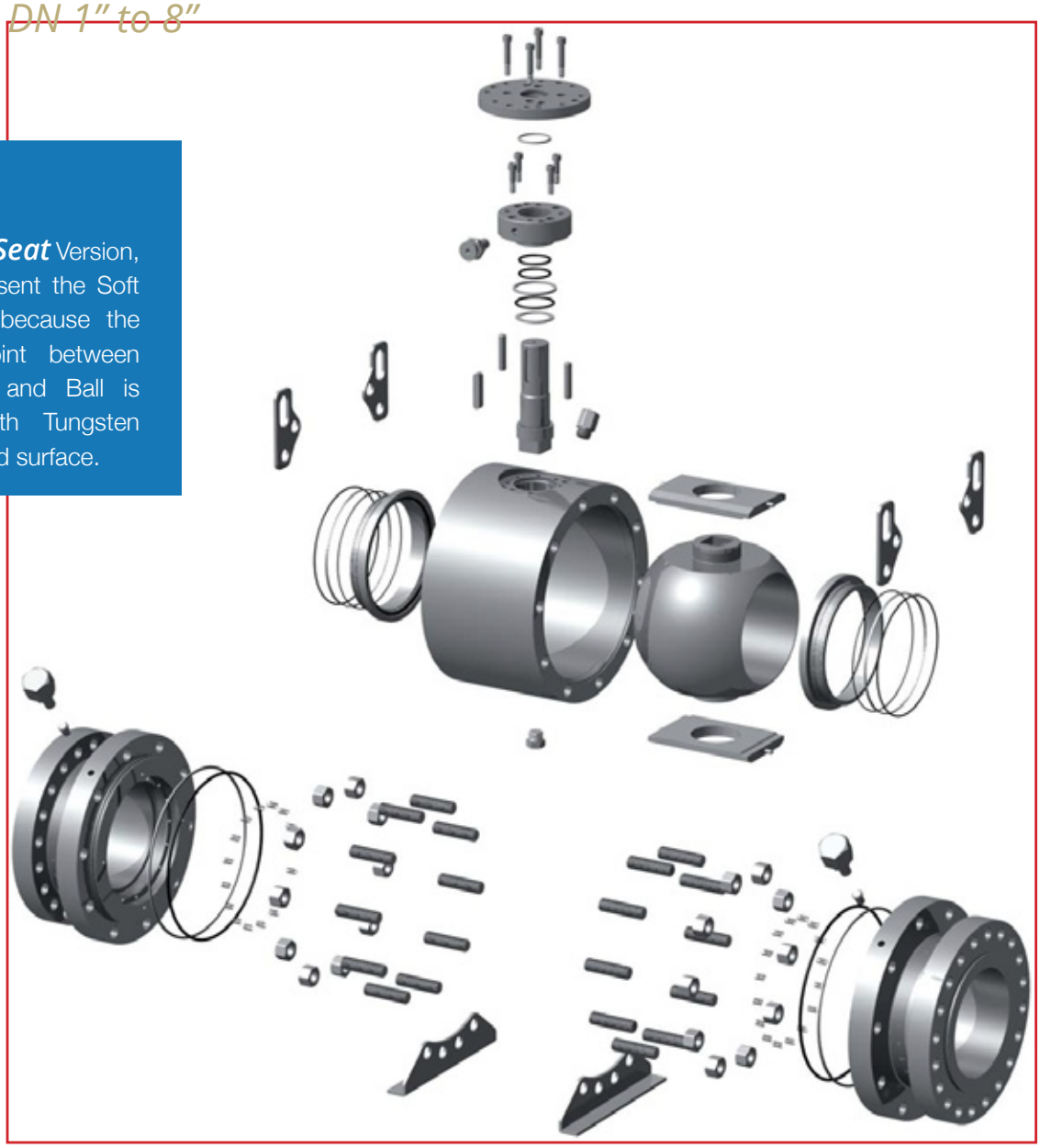

1	Recommended spare parts	27	10 Seat ring	20 Trunnion bolt
2	1 Body	28	11 Seat spring	21 Drain plug
3	2 Closure	36	12 Seat gasket	24 Stem
4	3 Closure gasket	37	13 Seat O-Ring	25 Shell bearing
5	4 Closure O-Ring	39	14 Trunnion	26 Stem gasket
8	5 Closure stud	40	16 Thrust washer	27 Stem O-Ring
9	6 Closure nut	41	17 Shell bearing	28 Gland flange
24	8 Ball		18 Trunnion gasket	29 Gland flange gasket
26	9 Seat insert		19 Trunnion O-Ring	30 Gland flange O-Ring

11.1 Disassembly

1. Close the valve
2. LEVER: remove the Nuts (41), the lever (40), the stop sector ring (37).
2. GEAR: remove gear connection bolts and lift up the gear box, remove the bolts (35) and extract the cover for access at the stem gasket
3. Unscrew the nuts (35) and remove the Cover, remove stem gasket (26) and remove the lip seal or the seal (27), extract the stem extension (58)
4. Unscrew the nuts of extension bonnet and lift up.
5. Unscrew the nuts (35) and remove the Cover (32), unscrew the nuts (35) and remove the gland flange (28) the gasket (29) and the ring (30).
6. Unscrew the nuts (20) and remove the trunnion (14) the gasket (18) and the ring (19). During this operation hold the ball (8).
7. Remove the Ball (8) from the inside, the upper ring (16-25), the Stem (24).
8. Check the components integrity and condition (Seals, O-rings, Seats, Ball, Stem) and when necessary, change those damaged.

10.2 Assembly

For the assembly, repeat the sequence in the opposite way and take care to clean and lubricate all the parts with mineral oil or grease compatible with the pipeline fluid / gas. Reccomended Lubricant: Grease MOLYGUARD MOLY TEF or Grease AUDCO 733X or VANGUARD TEKA 2

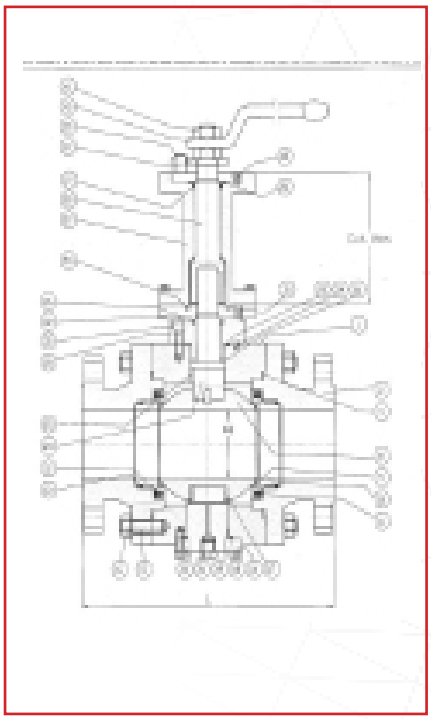

12.0 Ball check valve

Art.145

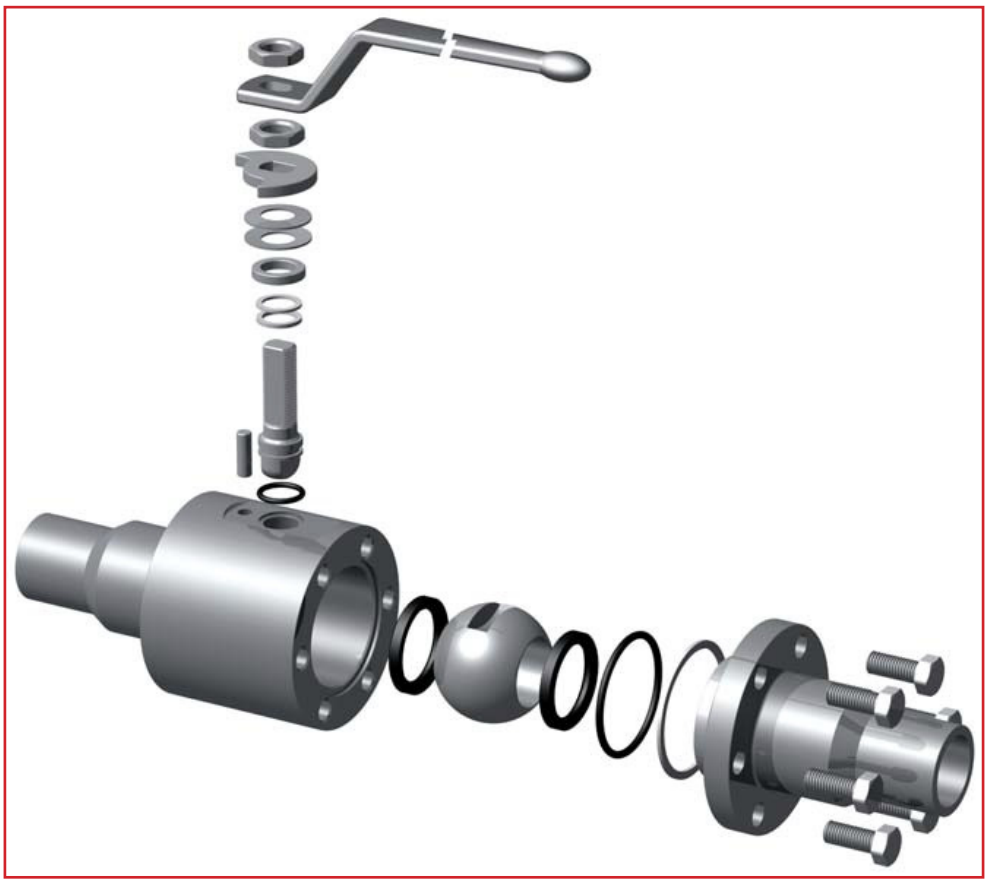

1	Body
2	Closure
3	Closure gasket
4	Closure O-Ring
5	Closure bolt
8	Ball
9	Seat insert
24	Stem
26	Stem gasket
27	Stem O-Ring
28	Ring
36	Spring washer
37	Stop sector
39	Stop pin
40	Lever
41	Lever nut

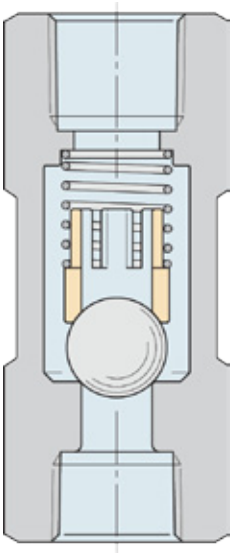

12.1 Disassembly

1. Unscrew the end connection (7)
2. Remove the Gasket (5), the Spring (6), the Ball Support (4) and the Ball (3).

Check the components integrity and condition (Metallic seats, Gasket, Ball) and when necessary, change those damaged.

12.2 Assembly

For the assembly, repeat the sequence in the opposite way and take care to clean and lubricate all the parts with mineral oil or grease compatible with the pipeline fluid / gas .

For an easy assembly, the valve must be oriented like in figure 5, with the body valve bottom.

Reccomended Lubricant: Grease MOLYGUARD MOLY TEF or Grease AUDCO 733X or VANGUARD TEKA 2

13.0 Check valve

Art.140

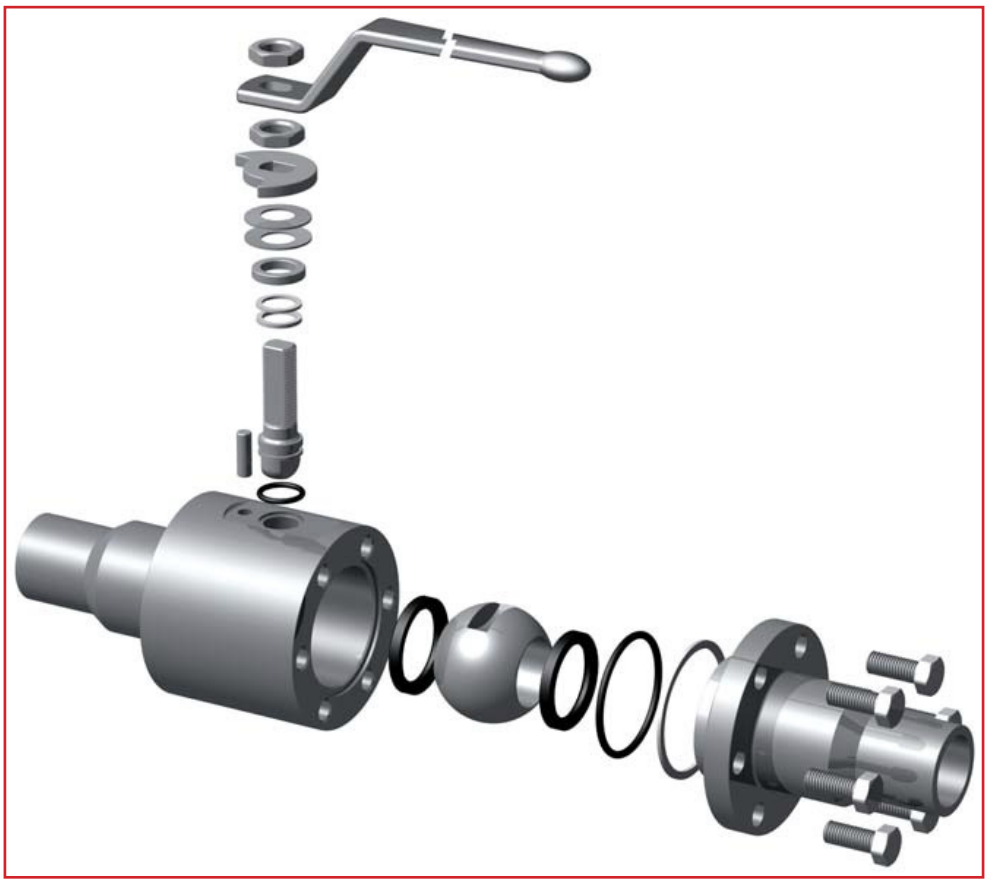

1	Body
2	Closure
3	Closure gasket
4	Closure O-Ring
5	Closure bolt
8	Ball
9	Seat insert
24	Stem
26	Stem gasket
27	Stem O-Ring
28	Ring
36	Spring washer
37	Stop sector
39	Stop pin
40	Lever
41	Lever nut

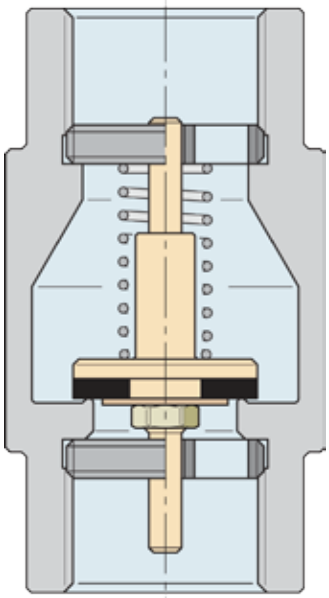

13.1 Disassembly

1.Unscrew the stem closure member (8) keep attention to the spring jumping out

2. Remove from open side the complete stem (6) with the Spring (7) and all other components altogether (3-4-5)

3. Check the components integrity (5) and the seats (4)

When necessary, change those damaged.

13.2 Assembly

For the assembly, repeat the sequence in the opposite way and take care to clean and lubricate all the parts with mineral oil or grease compatible with the pipeline fluid / gas .

For an easy assembly, the valve must be oriented like in figure 5, with the body valve bottom.

Reccomended Lubricant: Grease MOLYGUARD MOLY TEF or Grease AUDCO 733X or VANGUARD TEKA 2

14.0 Needle valve

Art.130

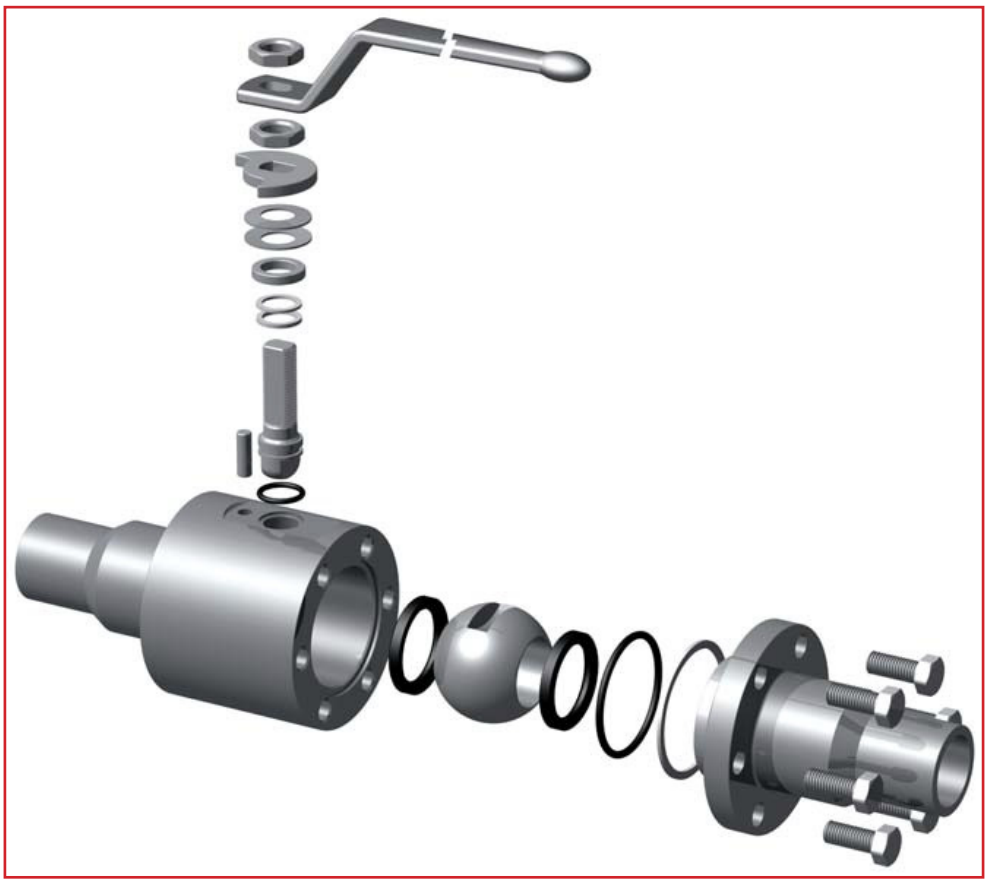

1	Body
2	Closure
3	Closure gasket
4	Closure O-Ring
5	Closure bolt
8	Ball
9	Seat insert
24	Stem
26	Stem gasket
27	Stem O-Ring
28	Ring
36	Spring washer
37	Stop sector
39	Stop pin
40	Lever
41	Lever nut

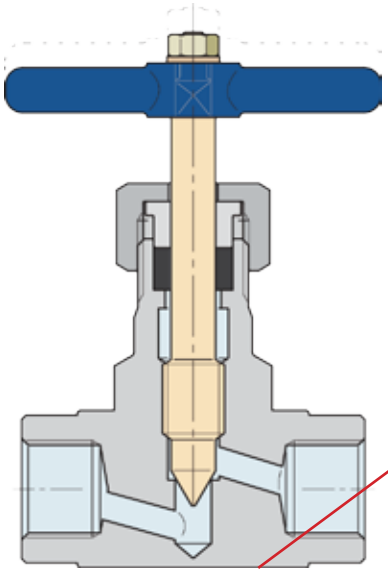

14.1 Disassembly

1. Unscrew the Bolt (8) and the Lever (7)
2. Unscrew the Bonnet Cover (6), the Ring (5), the Gasket (4), the Ring (3) and the O-Ring if present. Now is possible to remove the stem.
3. Check the components integrity and condition (Metallic seats, Gasket, Needle) and when necessary, change those damaged.

14.2 Assembly

For the assembly, repeat the sequence in the opposite way and take care to clean and lubricate the stem with grease compatible with the pipeline fluid / gas.
(Reccomended Lubricant: Perfluorinated grease Fomblin® RT15)
Take care, in the assembly operation, do not close too tight the Cover (6). A too high locking can cause difficult in handle and a possible damage at the stem.

Manca la "Relif valve"?

15.0 Needle valve

Art.100 – 105 – 120 – 160

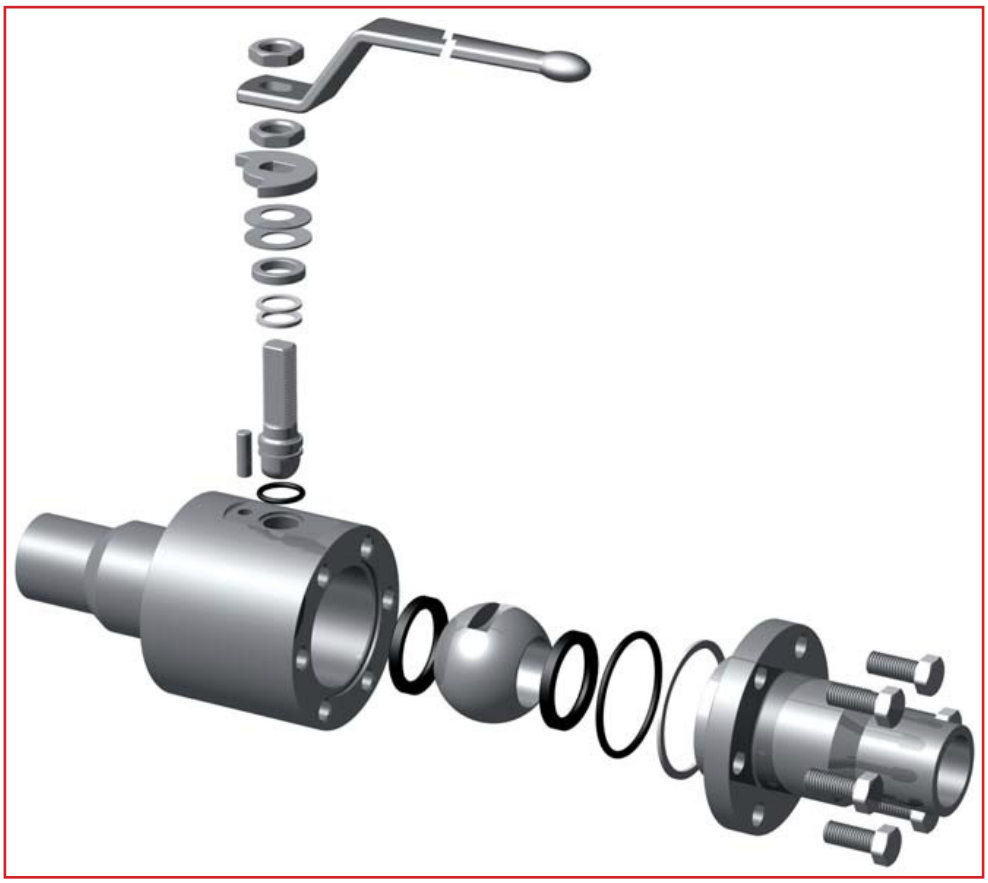

1	Body
2	Closure
3	Closure gasket
4	Closure O-Ring
5	Closure bolt
8	Ball
9	Seat insert
24	Stem
26	Stem gasket
27	Stem O-Ring
28	Ring
36	Spring washer
37	Stop sector
39	Stop pin
40	Lever
41	Lever nut

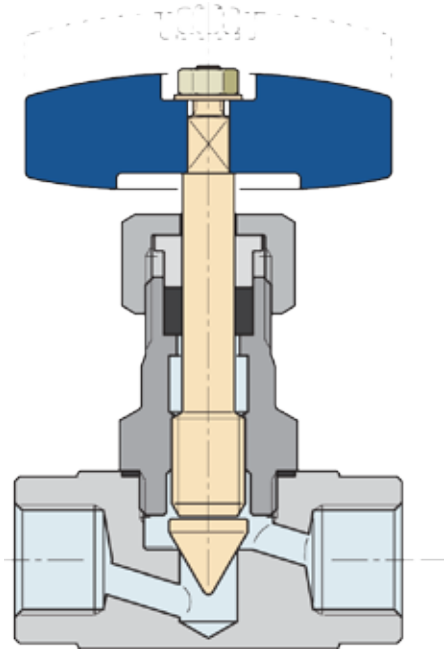

15.1 Disassembly

1. Unscrew the Bolt (56) and the Lever (55)

2. Unscrew the Bonnet Cover (50), the Ring (5), the Gasket (4), the Ring (3) and the O-Ring if present.

4. Unscrew the bonnet (49) with the stem

5. Now is possible to remove the stem from the down of the bonnet

5. Check the components integrity and condition (Metallic seats, Gasket, Needle) and when necessary, change those damaged.

15.2 Assembly

For the assembly, repeat the sequence in the opposite way and take care to clean and lubricate the stem with grease compatible with the pipeline fluid / gas.

(Reccomended Lubricant: Perfluorinated grease Fomblin® RT15)

Take care, in the assembly operation, do not close too tight the Cover (50). A too high locking can cause difficult in handle and a possible damage at the stem.

16.0 Three pieces floating ball valve

(swing out body)

Art. 20

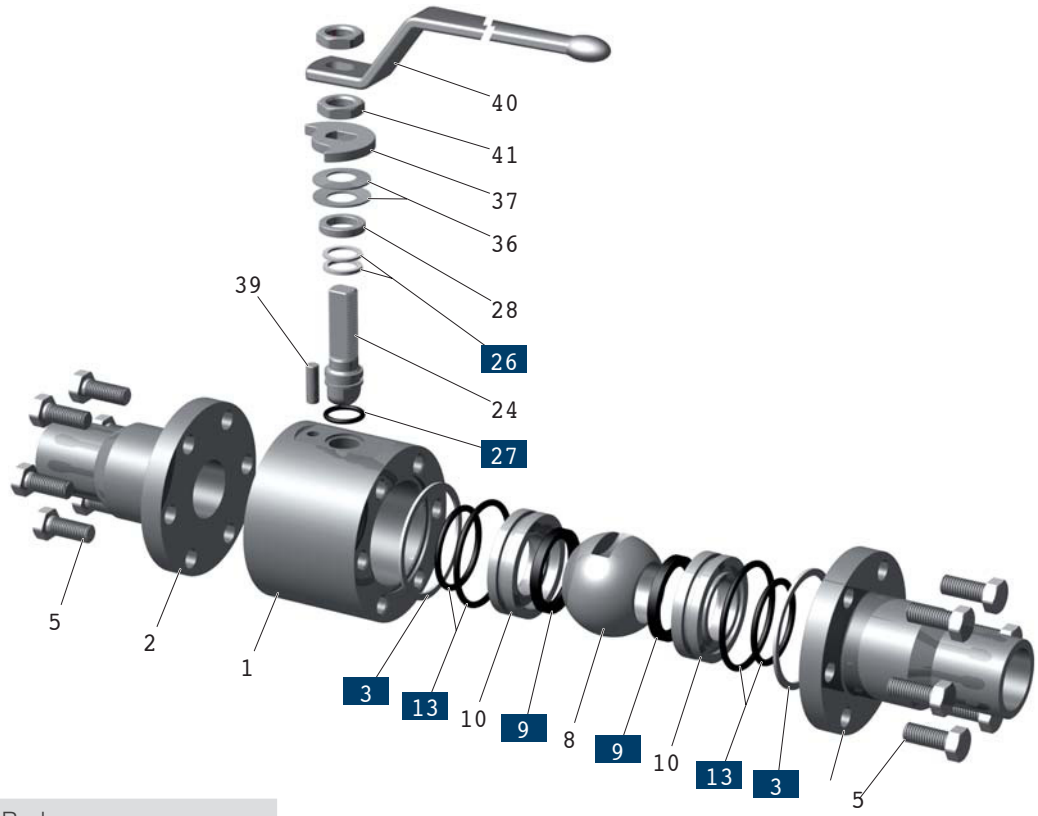

1	Body
2	Closure
3	Closure gasket
5	Closure bolt
8	Ball
9	Seat insert
10	Seat ring
13	Seat O-Ring
24	Stem
26	Stem gasket
27	Stem O-Ring
28	Ring
36	Spring washer
37	Stop sector
39	Stop pin
40	Lever
41	Lever nut

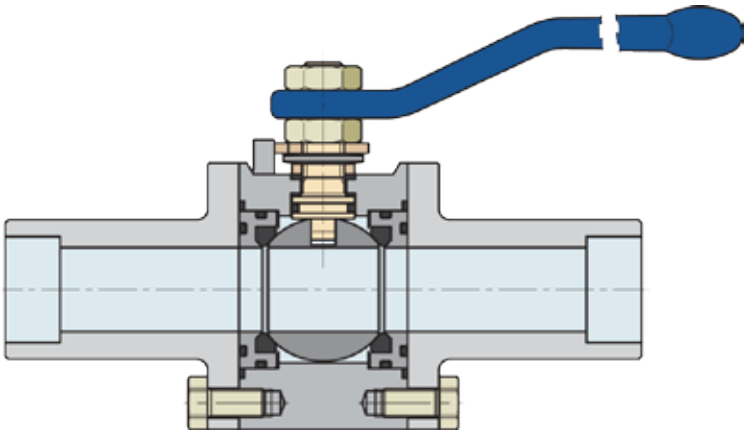

16.1 Disassembly

1. Close the valve
2. Unscrew the bolts (5) and remove the body (1) along with seat supports (10) taking care not to damage the Graphite rings (3) and the O-rings (4).
3. Remove the seat supports (10).
4. Move the valve lever (40) and incline the body valve to facilitate the ball (8) extraction.
5. Unscrew the top Nut (40), remove the lever and unscrew the lower Nuts (40).
6. Extract the Stop sector system (37), the spring washer (36), the ring (28) and finally the Gaskets (26).
7. Unthread from the inside the Stem (24) and remove the internal gasket (26) and the O-ring (27).
8. Remove the Seats (9) from the respective seat support
9. Check the components integrity and condition (Seals, O-rings, Seats, Ball, Stem) and when necessary, change those damaged.

16.2 Assembly

For the assembly, repeat the sequence in the opposite way and take care not to damage the Graphite rings (3) and the O-rings (4) and to clean and lubricate all the parts with mineral oil or grease compatible with the pipeline fluid / gas.

17.0 Three way trunnion ball valve

Art. 40

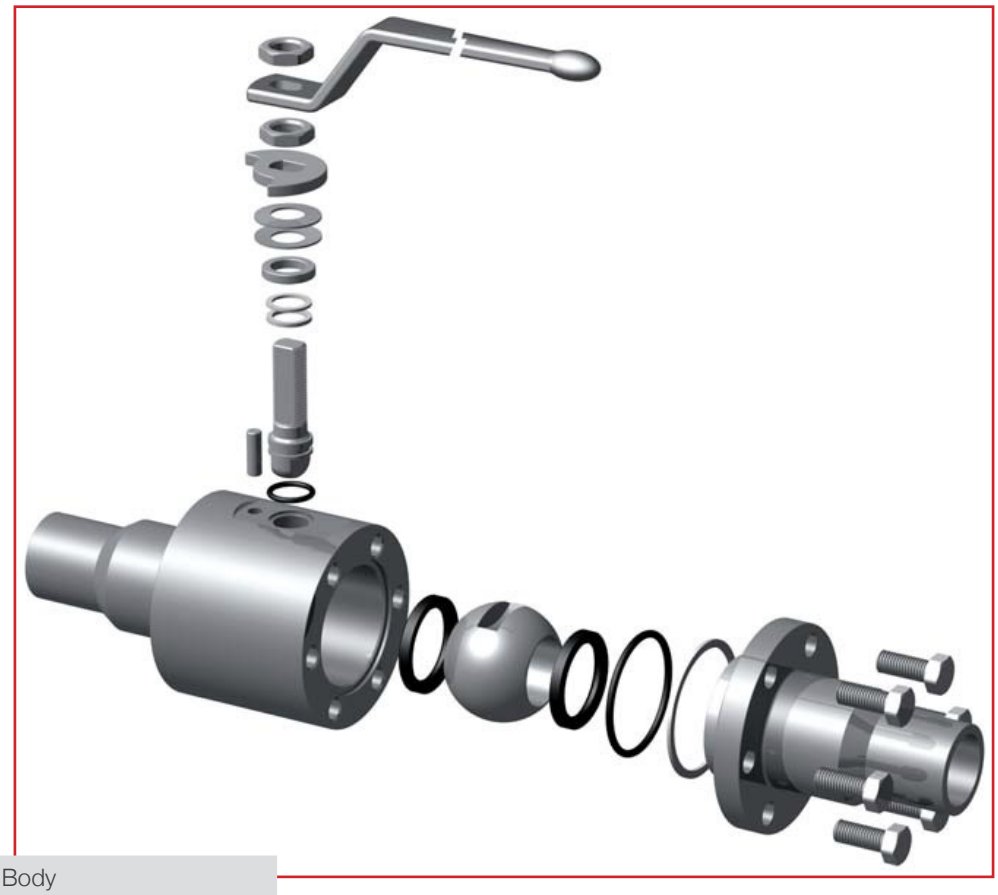

1	Body
2	Closure
3	Closure gasket
4	Closure O-Ring
5	Closure bolt
8	Ball
9	Seat insert
24	Stem
26	Stem gasket
27	Stem O-Ring
28	Ring
36	Spring washer
37	Stop sector
39	Stop pin
40	Lever
41	Lever nut

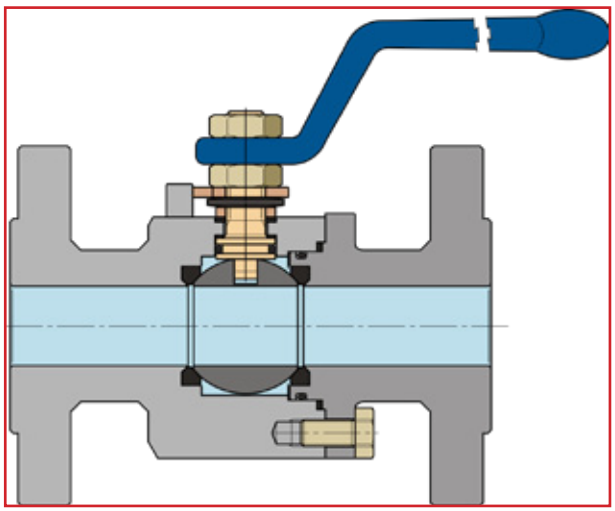

17.1 Three way trunnion ball valve

Art. 40

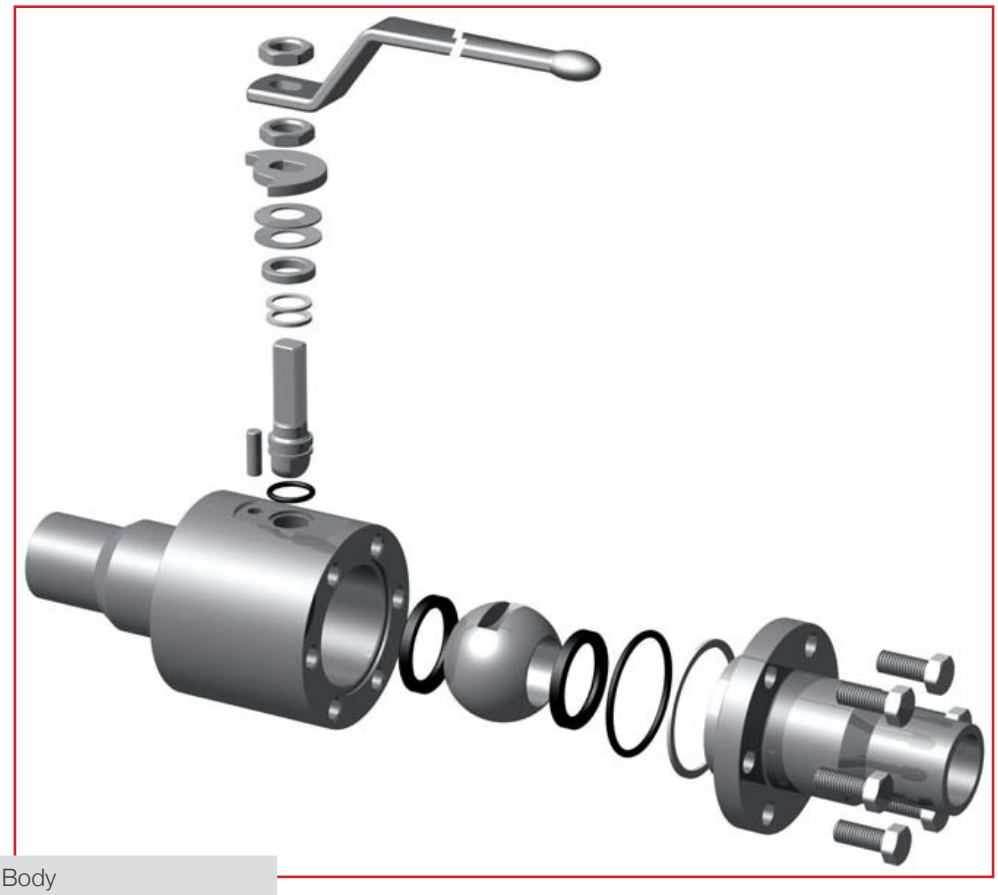

1	Body
2	Closure
3	Closure gasket
4	Closure O-Ring
5	Closure bolt
8	Ball
9	Seat insert
24	Stem
26	Stem gasket
27	Stem O-Ring
28	Ring
36	Spring washer
37	Stop sector
39	Stop pin
40	Lever
41	Lever nut

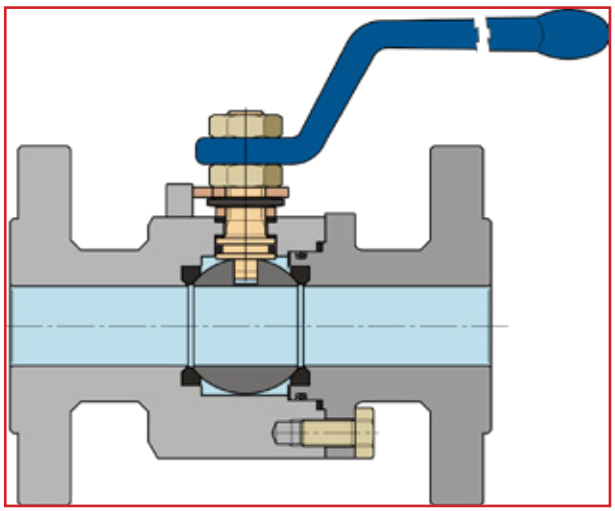

Cambiare i riferimenti alle Figure con riferimenti ai paragrafi?

17.2 Disassembly

Here is figure 10 for screwed type and figure 11 for the flanged and bolted type.
Disassembling have the only different that the connections must be unscrew in figure 10, however in figure 11 must unscrew the bolts and extract the flanged connections.

1. Unscrew all 3 connections (3-2)
2. Take care to not damage the Graphite rings (4) and the O-rings (4) (ONLY FIGURE 11)
3. Turn the valve and unscrew the trunnion (12-9) then extract the ball (4-8) from the body
4. Unscrew the top Nut (14-41), remove the lever and unscrew the lower Nuts (14-41).
5. Extract the Stop sector system (11-37), the ring (10-28) and finally the Gaskets (7-27).
6. Unthread from the inside the Stem and remove the internal gasket and the O-ring.
7. Remove the Seats (2-9) from connections seat supports
8. Check the components integrity and condition (Seals, O-rings, Seats, Ball, Stem) and when necessary, change those damaged.

17.3 Assembly

For the assembly, repeat the sequence in the opposite way and take care not to damage the Graphite rings and the O-rings and to clean and lubricate all the parts with mineral oil or grease compatible with the pipeline fluid / gas.

18.0 Inspections

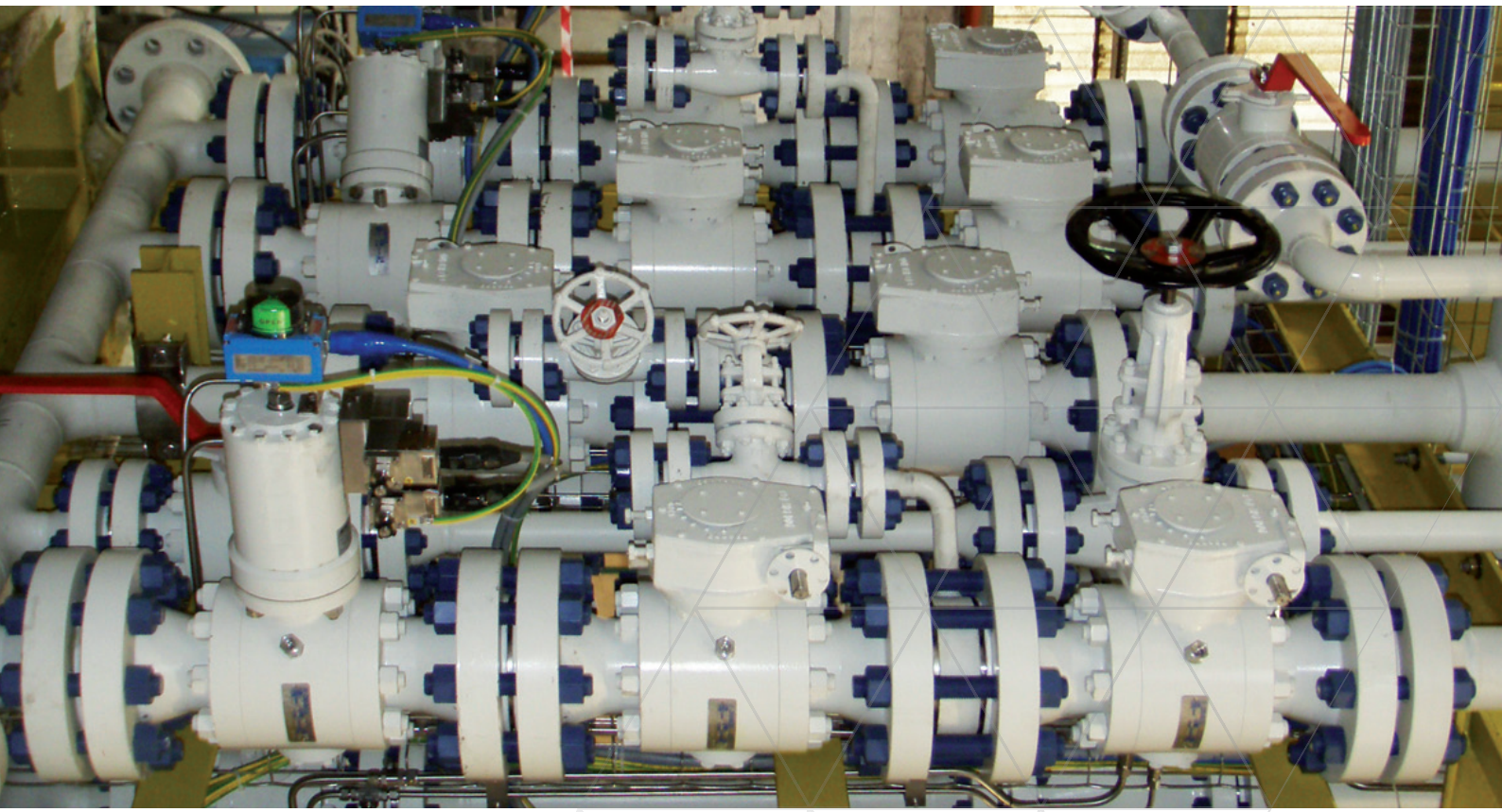

18.1 Recomended activities & spare parts

Zavero valves during normal operating time not require special maintenance due to years of design adjustment, improvement and optional available.
We recommend spare parts for the first 2 year and are all the soft components of the valves: gaskets, seals, seats and o-ring.
For the first 2 years of operation valves usually don't need maintenance, but we suggest to follow the table 1 "Check and controls" to avoid valves failures and damages:

Working Time	Parts to check or change
1 year	Stem torque and stem seals
2 years	Stem torque and stem seals
3 years	s Stem torque and stem seals
4 years	Stem torque and stem seals
5 years	Stem torque and stem seals
6 years	Stem seals and ball seats, all O-rings and gaskets, ballstem-mechanical components integrity and wear
7 years	Stem torque and stem seals
8 years	Stem torque and stem seals
9 years	Stem torque and stem seals
10 years	Stem torque and stem seals
11 years	Stem torque and stem seals
12 years	Stem seals and ball seats, all O-rings and gaskets, ballstem-mechanical components integrity and usury

18.2 Mean time to restoration

Valves normally maintenance provide to control and change only the soft seals, gasket and seats but for special use valves like corrosive or abrasive we suggest to check also the working parts like stem, the internal seat of stem, ball integrity, seat and seat ring, gear box or lever.
We suggest to check all parts of the valves every 6 years, disassembling the whole valve and change defect parts usually need following time (this time is calculated here in Zavero with all necessary components and machinery to proceed with this operation)

from 1/4” to 3” (2 pieces)	Floating Flanged Or Screwed	*20 minuts*
from 1” to 4” (3 pieces)	Flanged Floating	*40 minuts*
from 1” to 4”	Trunnion Mounted	*1 hour*
from 6” to 12”	Trunnion Mounted	*4 hours*
from 14” and over	Trunnion Mounted	*8 hours*

18.3 Trouble shooting

The following table show the common failure could happen to a valve during operating time.

Type of Trouble	Possible causes	Solutions	Applicable type
Valve is blocked in open or closed position	Valve could be in this position from too many time	Check operator functionality	All
		In case of actuated valves, remove the actuator from the valve and try to open or close with a gear box to check where is the failure.	
		If the problem is a failure of actuator follow the instruction for actuator maintenance and repair.	
	Valve could have something inside the bore or the body that limit the running	Look inside bore if there is something blocked.	
		Try to close with a more long lever but not force the valve to avoid stem break.	
		If at this point valve is still blocked try to unscrew the closure/flange just to have nuts free to move and you should be able to close.	
	Operator failure	At this point we suggest a control of components lubricate of parts, assembling, testing and control of torque.	
Valve is blocked at half run	Valve could have something inside the bore or the body that limit the running	Check operator functionality	
		Look inside bore if there is something blocked	
		Try to close with a more long lever but not force the valve to avoid stem break	
		If at this point valve is still blocked try to unscrew the closure/flange just to have nuts free to move and you should be able to close	All
	Operator failure	At this point we suggest a control of components lubricate of parts, assembling, testing and control of torque	
	Seats come out from his location ***(floating type only)***		
		Open the valve and change the seats components	Floating
Leakages from the stem	Possible damages to stem seat and seals	Follow disassembling/assembling instructions to check the stem seat and seals components	All
	Possible that cover or nuts of the stem components during working time unscrewed themselves	Try to screw the nuts or the cover depending from the type of valve	
Leakages from the cover	Possible damages to stem seat and seals	Try to unscrew the nuts	Trunnion - Needle
	Possible that cover or nuts of the stem components during working time unscrewed themselves	Swing out the cover and check o-ring, seat and seals	
		In case the problem is not resolved check the stem	

Note

Before any operation assure valve must not be under pressure and fully drained.

Type of Trouble	Possible causes	Solutions	Applicable type
Leakages from the trunnion	Possible damages of o-ring or graphite ring	Unscrew the boltings and check o-ring, seals and the body allocation of the trunnion	Trunnion
Leakages from the vent valve	Vent valve damaged	Unscrew the vent valve and substitute	Trunnion - Floating
	Vent valves unscrewed	Remove the seeger from the top of vent valve, unscrew the Needle and check the seats	
		Remember to fix the vent valve with teflon band	
Leakage from body-closures connections	O-ring, graphite, seals damaged	Unscrew the bolting or screwed connection end and extract the connection from the body	All
		Check o-ring, seals and graphite integrity	
Gear operator blocked	Possible failure or damaged of the gear box or valve is blocked	Remove gear operator and check if valve is blocked or if it is only a problem of the gear box	All gear operated valves
		In case of gear box you can choose to open it by unscrew the cover bolting and check inside the components	
		However remove broken gearbox and get new one	
Valve torque increase	It's recommend to check this value for valves working several time open or closed to avoid future failure on demand	If the check gives evidence of an increase of the value torque we suggest to disassemble the stem components and lubricate the parts	All
	If the torque value is increased in respect to the nominal value, this is a indication that valve needs maintenance	If after this maintenance torque value is not decreased we suggest to proceed with a full maintenance of the valve before failure on demand and damages of components	
Internal leakage	The valve could be not fully closed	Check valve in fully closed position and that components (indicators or stop sector or limit switch) show valve is in fully closed position. If one of this components don't show valve like fully closed follow instruction for gear or actuator regulation and adjustment of stop sector	All
	Valve over pressure		
	Seats damaged or trim damaged	Valve could have received an overflow pressure and Damage ball or seats or seats rings (trunnion type only) open the valve and check trim components and seats	
		Open the valve and check all the soft seals, seats, o-ring and graphite ring. Substitute all components damaged (for trunnion type, extract the seat ring from his seat and check soft parts of this components. If there is no damage lubricate and assemble. At this point check if ball or needle have structural damages	

18.4 Proof test execution

ZAVERO recommends to operate the Valves at least once per year. In order to verify the correct operability of the valves/actuators, once a year it's suggested to carry out a full stroke test (from fully OPEN to fully CLOSE to fully OPEN position or from fully CLOSE to fully OPEN to fully CLOSE position) starting from the normal valve operation position, with leak test. In order to improve the reliability of the valve, it's suggested to perform a partial stroke test (from fail position OPEN or CLOSE to approx 15°).
During the full stroke test (and where relevant during partial stroke test) follow the table herebelow.

Working Time	Parts to check or change	Type of control
Open And Close Functionality at ambient temperature without pressure	Proceed with 1 functional test open the valve and close the valve	Mechanical by gear by hand by actuator
Open And Close Functionality at ambient temperature with valve in pressure of rating (M.O.P.)	Proceed with 1 functional test open the valve and close the valve	Mechanical by gear by hand by actuator
Fluidity Of The Movement	Check inside the bore if the ball of the valve run easy free or there is a discontinuity during partial running	Visual
Time To Open And Time To Close (for actuated valves)	Check valve time to open or to close if the time is increased or not respect project requisition	Chronometer
Check For External Leakage	Valves must be under pressure and open, look for external leakage from every connections	Visual check could be performed for liquid leakage. For gas leakage must use a sniffer or spectrometer
Check For Internal Leakage	Valve must be under pressure and closed but with one side open for inspection	Check could be performed by visual inspection for liquids or with sniffer or spectrometer for gas
General inspection	Check the valve for damaged parts like foots or lifting lugs, grease inject or paint breaking	Proceed with a visual inspection of all the surface and accessories of the valve

During the proof test if appears any type of malfunctions or probability of failure check the trouble shooting table to understand what could be the cause of the damage and proceed with the repair as showed in the table.

19.0 Seat insert rectification & lapping

Proceed removing the closure from one side of the body and then extract the seat ring (10).
Keeping the body fully assembled (but without connections) turn the ball in closed position
Take one seat ring (10), apply abrasive paste** on the seat insert (9) and proceed as follow:

- Rotate 360° on the centre of the ball (left-right-left-right)
- turn with elliptical movement the seat ring around the centre of the ball

A black point with a pencil on centre top of the ball can help to stay always in the same position.

** Abrasive paste have different type of grain, we suggest always to proceed with a smooth finish paste and repeat operation several time

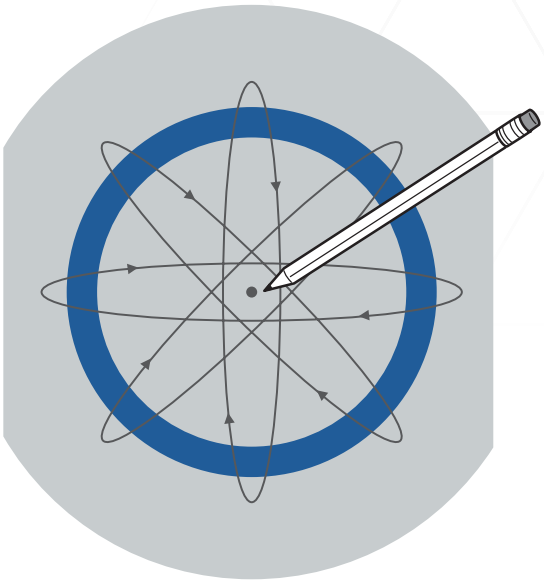

Follow the image description:

the red area is the seat working area so proceed on it to turn the seat ring left and right.
The black elliptical are the movements to follow with the seat ring during lapping.
Suggestion: look inside the bore of seat ring during elliptical movement, the black point of the center must stay inside this bore.
Don't lap over this point because not necessary

19.1 Seat insert rectification & lapping

Fast test for lapping execution before assembling:

- step 1: test the seat with blue paste (Prussian blue) for contact
- step 2: put the complete seat on the ball and fill in with water and check leakage
- step 3: if step 2 has no leakage proceed with final preliminary test:

push by hand on the seat ring full of water and proceed with compressed air to spry from the below part of the seat ring (where there is contact between ball and seat) around 360 degrees and check for bobble inside it.

If after this checks the seats result conforming to requisition you can assemble the valve and test it with operating pressure, otherwise you have to repeat all the process again and re-test.

2.0 Transportation & reception

*Note

The valve's open/close position indicator is located on the handle sleeve for lever operated valves and on top of the gearbox for gear-operated valves.

**Note

For safety purposes, pneumatic actuated valves are shipped with ball in closed position with end caps protecting serrations and preventing the entry of foreign debris during transportation. Special care must be taken to avoid damage to the surface of the ball.

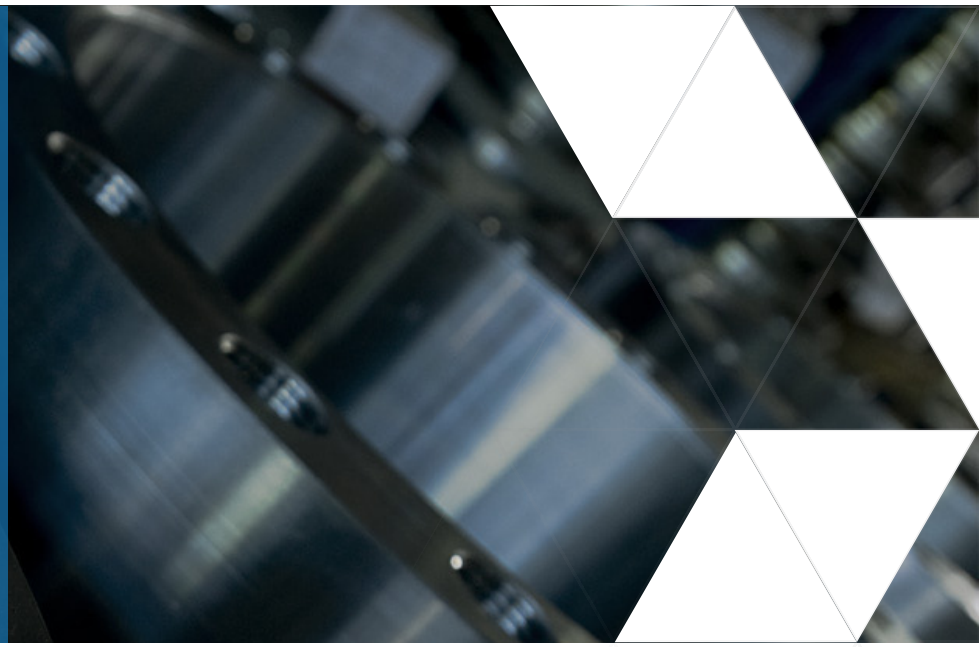

1. While unpacking the valve, confirm that the valve and any accessories were not damaged during transportation.
2. If the valve or any of its accessories were damaged or lost during transportation, inform SCV immediately.

Caution: Do not place the valve directly on the ground or concrete floor! Place the valve on a wooden pallet for inspection.*

3. Lever and gear-operated valves are delivered with the ball in the full open position. Valves are shipped with flange protectors which are designed to protect the flange face serrations and prevent the entry of foreign debris during transportation.**
4. Do not remove the end caps or protective flange coverings from the valve until it is ready for installation. If the protective coverings are removed for examination, immediately reinstall all protective coverings after the inspection.
5. SCV recommends storing the valves indoors, in a dry, dust free atmosphere.

3.0 Storage

Caution!
When handling the valve or valve package, remember, valves are very heavy!

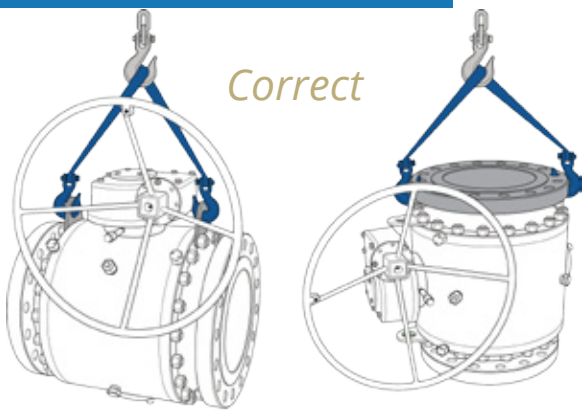

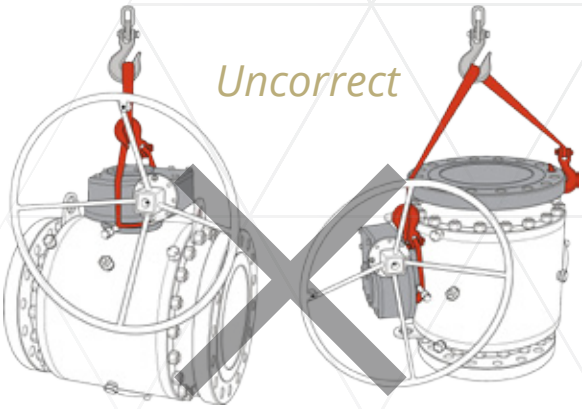

If the valves are to be stored for an extended period of time, the following procedures and steps are to be followed.

1. Spray the inside of the valve with Tectyl 502C Rust Inhibitor or equal.
2. Inject Shell B-B Grease into the secondary seat ports.
3. Insert Shell VPI #300 tablet into the valve body cavity to aid in keeping moisture out of the valve.
4. Spray a rust inhibitor (WD40, or equal) on the flange facing of each end connection.
5. Install plastic or plywood flange protectors on each flange. Tape the edges of the protector with duct-tape to provide an air tight seal.
6. The product should be operated monthly to ensure lubricated areas have lubricant distributed accordingly. The valve stem should be left in a different position each month. When stroking the valve, use filtered dehydrated and lubricated air to operate the actuator.
7. All gear operators are to have EP type grease injected in all fittings monthly.
8. For valves with actuators, the actuator should have all fluid ports or connections plugged to prevent ingress of water or dust. Coupling parts must be protected with grease or protective oil.
9. Valve should be stored in a dry, weatherproof building (preferably climate controlled).
10. Place an approved lifting device securely around the valve body or use lifting hooks while handling the valve. Special care should be taken not to damage the lever/gearbox/actuator. (Figure above)

3.0 Do's & don'ts

Note

Read and understand the Do's and Don'ts before valve installation, operation, or maintenance. Contact SCV with any questions or concerns.

Do's

1. Use the valve for the specified application as agreed between SCV and the purchaser/end-user.
2. R ead this manual before installing or operating any SCV valve.
3. Train employees on the safe handling and use (maintenance and operation) of the valve.
4. Ensure the nuts/bolts are tightened to the specified torques.
5. Ensure the electrical continuity of the valve.
6. Open or close the valve slowly to avoid a hammering effect on the valve and the pipeline.
7. Always replace the damaged parts with genuine and recommended SCV parts.
8. Be aware of the media type and environment (explosive, highly flammable, toxic, oxidizing, etc.) in which the valve is to be used. Protect people and the environment from any harmful or poisonous substances.
9. To avoid any major product/environmental damage, remove any residual hazard(s) (as applicable, or as informed by the SCV).
10. The valve body may be very hot or cold during use. Take all precautions to protect against burn/freeze injuries.

Don'ts

1. Do not exceed maximum operating conditions (pressures, temperatures, etc.) as specified on the body and/or nameplate.
2. Do not allow the valve to remain open at any intermediate position.
3. Do not try to rectify any valve leakage by reworking the seats. Leaking seats have to be replaced with new genuine SCV seats.
4. The threaded connections in the valve body for the drain and vent lines are sealed with threaded plugs. Do not remove these plugs while the valve is under pressure.
5. Do not modify the valve at any time under any circumstances.

5.0 Installation

Horizontal = Correct

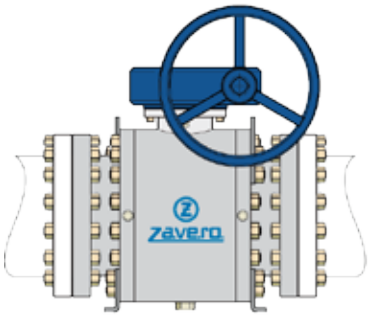

Vertical= Correct

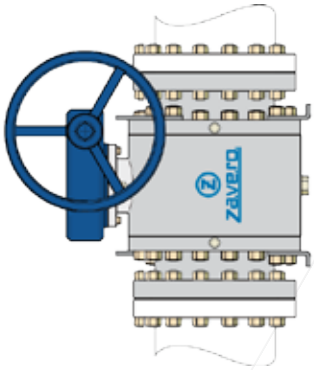

Upside Down= ***Uncorrect***

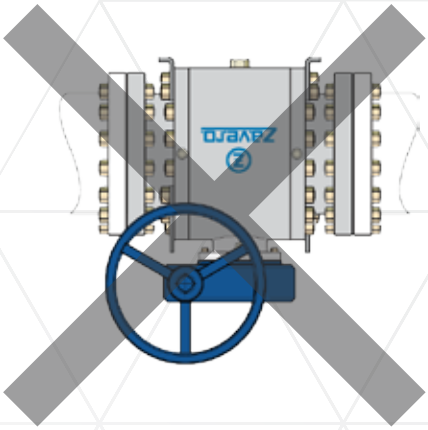

1. Before installing a new valve, confirm that the specifications of the valve matches those of the intended installation area. The nameplate will provide the necessary information. If this information is missing, consult SCV.
2. When removing the valve from storage, inspect it for damage.
3. Before installing the valve, remove the protective covering and end-caps to ensure the serrations on flange face are not damaged and the bore is clean. Clean the valve with approved solutions if necessary.*
4. During commissioning and pipeline flushing, the valve must remain in the full-open position to prevent damage to internal parts.**
5. Ball valves are designed for bidirectional flow unless the ball is prepared for cavity relief. For a ball with a cavity relief hole, ensure that the installation of the valve is correct with respect to the flow direction arrow marked on valve.
6.Valves can be mounted in a horizontal (with stem upwards only) or vertical position depending on pipeline routing. SCV does not recommend installing the valve with the actuator on the underneath side because dirt in the pipeline may enter the body cavity and damage the gland packing. (Figure above)

*Caution!

Prior to installation, ensure the pipeline is clean. Pipeline debris, scaling, etc. will damage the soft seat inserts of the valve and cause seat leakage during commissioning.

**Note

To prevent damage to the valve, SCV recommends first installing a spool piece instead of the valve while flushing the pipeline. If a spool piece is not an option, install strainers at critical locations upstream from the location to remove foreign debris. It is pertinent that the valve remain in the full-open position during flushing.

5.1 Installation

Base support = Correct

Pipe supports = Correct

Suspended support= Correct
(attached to overhead structure)

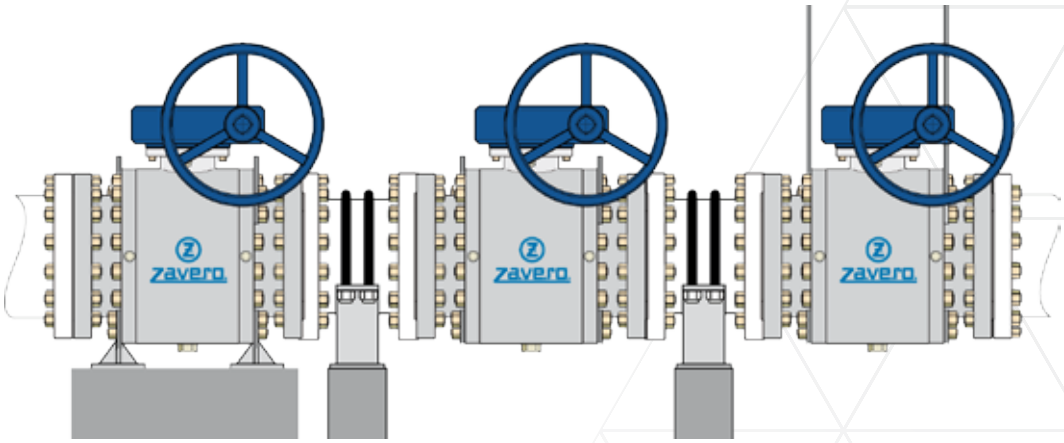

7. It may be necessary to firmly support the pipeline in order to protect the valve from excess stress and to reduce the pipeline vibrations. To facilitate servicing, it is recommended that the valve be supported by the body, using approved support devices. Do not fasten supports to flange bolting or actuator. (Figure above)

Flanged End Valves

8. Do not use flange bolts to correct misalignments.
9. During tightening operation, ensure that piping stresses are not transferred to the valve.
10. Over-tightening flange studs can cause damage and/or leakage at the flanges or body-to-body end joints.

Butt Weld End Valves *

11. Ensure a gap of 0.08” to 0.12” between the valve ends and pipeline as per ASME Welding Standard then tack weld the
pipeline and valve ends. After proper alignment of the valve to the pipeline, complete the weld as necessary.

*Note

Welding operation must be performed by a qualified welder. The welding procedure should be performed according to ASME Boiler and Pressure Vessel Code Section IX.

*Caution

To prevent seat/seal damage during welding installation, do not allow the temperature of the valve body seat area to exceed 200° F (94° C). Use thermal chalks to monitor temperatures.

*Note

Any damage to the seats due to temperatures greater than 200° F (94° C) can cause leakage. SCV recommends keeping spares readily available.

6.0 Valve Operation

Rispetto al riferimento manca la vista superiore, è necessaria?

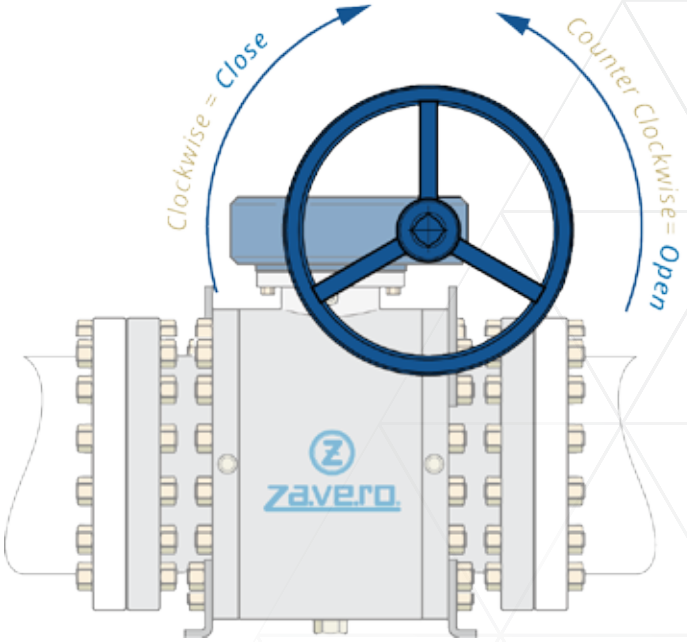

1. For lever operated valves, the hand lever is either assembled with the valve or shipped by fastener, depending on the size of the valve or hand lever.
2. For gear operated valves, ***the gearbox open/close adjustment has been made prior to dispatch and must not be disturbed.*** Rotation of hand wheel in the clockwise direction closes the valve. Counter clockwise rotation opens the valve (looking from the hand wheel end.) The internal details/construction of gearbox may vary as per manufacturer's standard. (Figure above)*
3. SCV ball valves always close in a clockwise direction. The ball should always be rotated through 90° to the fully opened or fully closed position.**

*Note

Do not apply extra leverage (using pipe/bar), when the end stops or the gearbox reaches it's final setting point.

*Caution

Ensure that the force applied on the hand wheel of the gearbox or lever does not exceed 265 ft. lbs. valve body seat area to exceed 200° F (94° C). Use thermal chalks to monitor temperatures.

** Caution

Keeping the valve at any intermediate position should always be avoided, as high velocity through the narrow opening will produce erosion of seats, ball and the body.

7.0 Maintenance

*Caution

Obsrve the Caution/Safety precautions before carrying out maintenance.

Guidelines for routine user maintenance are as follows:

1. Check the tightness of nuts/bolts between the body/body adapter, the bracket/stem housing, and the body/trunnion.
2. Ensure that the performance of the valve is satisfactory.
3. Ensure the electrical continuity of the valve.
4. Ensure that no leakage is being observed from the valve.
5. Frequent observation is recommended under extreme application/condition.
6. To remove debris from the sealant system, periodically flush the sealant ports with an approved valve cleaning solution.
7. Mounting studs/nuts of the worm gearbox may be checked for tightness and retightened if necessary.

8.0 Preventive maintenance

1. In order to avoid failure during operation, all valves in a process plant should be periodically inspected thoroughly for wear on the ball, seats, seals, or body. If wear is discovered, SCV recommends replacing seats, seals, gaskets, and packing with genuine SCV parts. Check the electrical continuity of the valve and pipeline.
2. The type of process, fluids involved, working conditions, and location of the valve in the process plant, will determine the frequency of the inspection/maintenance.
3. Preventive maintenance is essential as the failure due to lack of maintenance may cause an emergency shutdown of the plant.
4. Before removing the valve from the pipe, it is important to mark the relative position of the valve flange with respect to pipeline flange and the flow of direction of the valve.
5. Once a valve is repaired, it should undergo a complete set of tests to make sure that the valve is adequate for the original working conditions. Hydrostatic/pneumatic shell/seat tests should be carried out as per the specifications relevant to the valve.*
6. Sealant/lubrication injection feature in Trunnion mounted ball valves
6.1. Secondary sealant/lubrication injection systems are used only when a temporary tight shut off is required due to seat ring or stem seal damage caused by foreign debris in the process media. Flush the sealant/lubrication port with suitable valve cleaner. Use only standard grade valve sealants/lubricats suitable for the media in the valve. Using a hand pump, inject sealant/lubrication into the seat surface through the injection port located on the valve body and stem housing. This will purge old sealant debris from the valve seats.
7. Procedure for sealant/lubrication injection
7.1. Trunnion mounted pipeline valves of sizes 6” NB and above are provided with two sealant/lubrication injection ports on the body/body adapter for individual seats and one sealant/lubrication injection port on the stem housing. Each port provided on the body provides sealant entry to the stem sealing area. The ports are fitted with an inline check fitting.

*Note

Clean the valve carefully of all media. Inform SCV of any dangerous media involved when sending the product to SCV for servicing.

**Note

To prevent damage to the valve, SCV recommends first installing a spool piece instead of the valve while flushing the pipeline. If a spool piece is not an option, install strainers at critical locations upstream from the location to remove foreign debris. It is pertinent that the valve remain in the full-open position during flushing.

8.1 Preventive maintenance

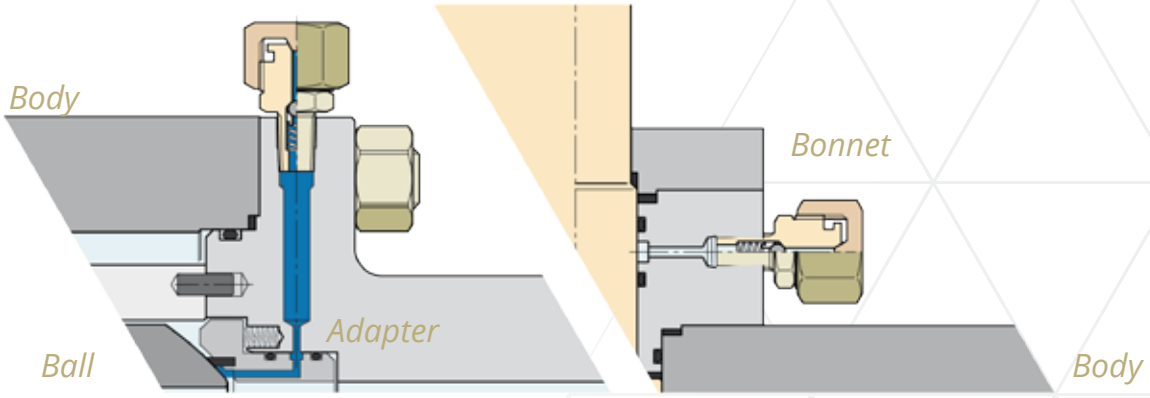

7.2. Injecting handgun: Sealant is injected by connecting the outlet fitting of the handgun to the sealant injection port.*

8. Sealant should be injected only when the valve is in the closed position to ensure effective sealing of the damaged seat.

9. Refer to the sealant injection fitting arrangement. Slide the giant button head coupler which is integral with the hose of the sealant injection gun, over a double-check one-piece fitting. Now the arrangement is ready for injection of the sealant. (Figures above)

Lubrication of Worm Gear Box

10. Worm gear boxes are supplied with grease. Normally the grease is suitable for -20°C (-4°F) to 80°C (176°F.) For other applications, consult the Factory/Branch office.

11. Grease as necessary.

11.1 Grease should be changed if operated frequently, after approximately three years.

11.2. If operated rarely, after approximately five years.

11.3. The primary reducing spur gear unit attached to main worm gearbox should be re-greased at least annually.**

*Note

Sealant injection is to be carried out only if the valve seats or stem packing are leaking.

**Caution

Disassembly of the gear box should be done only by experienced, trained operators and as directed by SCV.

9.0 Trouble shooting

The following table lists the possible malfunctions that might occur after prolonged use.

Symptom	Possible fault	Actions
Leakage through a closed Valve	Damaged ball surface	Replace the ball
	Damaged seats	Replace seats
	Ball might not be closed fully	Check ball Open/Close settings
Irregular ball movement	Impurities between the ball and seats or ball - body cavity and ball seats	Flush the ball from inside
		Clean the sealing surfaces and seats
Valve too hard to operate / valve torque too high	Damaged seats	Replace the seats
	High application pressure/ temperature	Confirm the application pressure/ temperature rating
	Foreign particles in valve	Clean the internals
Water hammer or noisy operation	Error in valve sizing or flow of fluid with high velocity	Confirm valve sizing with respect to flow
Leakage through stem	Gland nut loose	Tighten gland nut
	Damaged stem, stem sealing surface	Replace the stem
	Damaged stem seal	Replace the stem seal

9.1 Trouble shooting

Ordering the spares.

Information	Location
Size of Valve	Available on name plate or body of the valve
Valve Rating	
Serial Number/Batch Number	
Manufacturing Date	
Part Number	Available on general arrangement drawing
Name of Part	
Number of Pieces Required	
Purchase Order Number	

Note

Selection and use of the valve for a specific application requires close consideration to detailed aspects. Due to the nature of the product, this manual cannot cover all of the individual situations that may occur when installing, using or servicing the valve.

Caution

Follow safety rules and regulations to avoid personal injury or equipment damage.

10.0 Disassemble & reassemble

Fastener Torques

Thread Size	Property Class 8.8	Property Class 10.9	Property Class (B7/B7M/B8/B8M)
M8	2 (20)	2.9 (28)	0.6 (6)
M10	4 (40)	5.7 (56)	1.2 (12)
M12	7 (69)	10 (98)	2.2 (22)
M14	11.3 (111)	15.9 (156)	3.6 (35)
M16	17.2 (168)	24.2 (237)	5.4 (53)
M18	24.4 (239)	34.3 (336)	7.7 (76)
M20	33.5 (329)	47.2 (463)	10.7 (76)
M24	57.9 (568)	81.5 (799)	18.5 (181)
M27	87.5 (858)	123 (1207)	27.8 (273)
M30	115.9 (1137)	163 (1599)	36.9 (362)

Warranty:

All seller's products are guaranteed against defects in workmanship for a period of twelve (12) months after being placed in service, but not exceeding eighteen (18) months after shipment, when products are properly installed per seller specifications and used within the service and pressure range for which they were manufactured. Full risk of loss shall pass to the buyer upon delivery Ex-works, or destination port in case of CIF. This guarantee is limited to the replacement of any valve parts/components found to be defective either in material or workmanship. This guarantee does not extend to costs of labor, freight, or any other consequential charges. The unauthorized use of third party components and workmanship in seller's products voids this warranty.

Important

Please contact Zavero regarding disassembly/assembly matters.

Note

Ensure that all of the nuts and bolts are tightened to the torque values as specified in this table.

Note

In case of service/repair, please contact Zavero.

11.0 Cold temperature maintenance program

Cold weather time operation reminder

Note

32° F is the temperature water will freeze. Here are some frozen water hydraulics generated by fluids frozen solid.

Allowing freezable fluids to be trapped inside the valve will result in damage to the valve when the fluid freezes.

Pressure Exerted By Frozen Fluids

Temperature	Internal Pressure
32°	14.7psi
30°	2,100 psi
25°	7,000 psi
18.5°	12,660 psi
9.5°	20,056 psi
5°	23,115 psi
.5°	26,103 psi

Note

Eliminate trapped water in your system to avoid system damage

19.1 Spare parts

Recommended spare parts	<10	11-20	21-30	31-40
Ball	0	1	2	3
Seat Assembly	0	2	4	6
Stem	0	1	2	3
O-rings (set)	1	2	4	6
Wave Spring 6"-14"	0	2	4	6
Gear Box	0	0	1	1
Vent Fitting	1	1	2	2
Thrust Washer	2	4	4	6
Bearing	2	2	4	4

While the Zavero Ball Valve is designed to provide trouble free service, we recommend that the spare parts be inventoried in operations having numerous valves of a given size and an in-house maintenance program. Having spare parts on site will help to reduce downtime and maintain valves so that they provide years of service. Spare parts may also be ordered directly from the factory. Please provide the valve serial number when contacting Zavero. The serial number can be found on the nameplate and is also stamped on the valve body, Identifying the serial number will expedite any request and ensure that correct information is provided.

2.0 Warranty

Note

With exception to the warranty set forth above, M&J Valve makes no express or implied warranties, no warranty of merchantability, no warranty of fitness of purpose, and no other warranties which extend beyond the description on the face hereof.

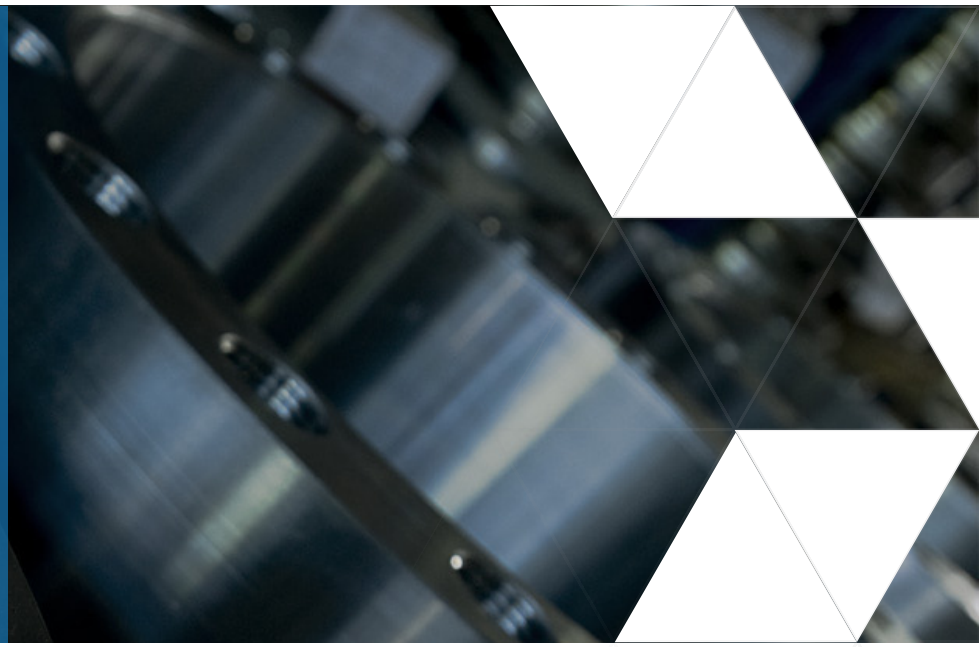

Zavero Valve warrants all equipment manufactured by it to be free from defects in workmanship and material, provided that such equipment was properly selected for the service intended, properly installed, and not misused. Equipment which is returned transportation prepaid to M&J Valve within 12 months from date of installation or 18 months from date of shipment, whichever expires first and if found by Zavero Valve's inspection to be defective in workmanship or material will be repaired or replaced, at Zavero Valve's option, free of charge and return-shipped lowest cost transportation prepaid.

0.0 Terms & conditions

Quotation Validity

This quotation is valid for 30 days from the date quotation is sent. Validity on special metals, including Stainless Steel, is 14 days from the date the quotation is sent. All products offered from stock are subject to prior sale.

Shipments

All items quoted are EXW our Dock - (Ex Works - SCV Facility Sante Fe Spings, California 90670) - unless otherwise noted and agreed to in writing. Shipment may be billed either third party billing to the buyer or freight collect. Shipment dates offered above are forecasted delivery lead times and are estimated from the date payment terms (acceptable to seller) are established, clarification is received on all technical information, and resolution of customer's written approval of drawings is received (when required). The equipment quoted shall be packed in accordance with seller's standard packing procedure unless otherwise noted and agreed to in writing by the seller.

Force Majeure

If in the case of an act of God, war, riot, fire, explosion, flood, or any other circumstances of whatsoever nature which are beyond the control of the seller and which in any way affect the ability of the seller to fulfill its delivery obligations, the delivery is hindered, impeded, or delayed the seller shall be exonerated from all responsibilities and reserves the right to postpone the delivery beyond the original schedule.

Payment terms

All terms are to be negotiated. Credit cards accepted (Master Card, Visa, American Express).
Purchase Orders All buyer's purchase orders supplied to the seller are to be written in the English language.

Prices

All prices quoted are in USD as per the preceding pricing schedule. The minimum order value is $5,000.00 (five thousand dollars), unless otherwise agreed to by seller. If for some reason any items are changed or additions to the order required, seller reserves the right to adjust prices accordingly. All sales are subject to approval of seller's credit department. If buyer fails to meet the agreed upon and established commercial terms of the contract, the seller may with-hold all subsequent deliveries until such time that the original commercial terms of the contract have been met by the buyer (or subsequent commercial terms have been agreed upon by the seller with the buyer).

Intellectual Property

All specifications, illustrations, drawings, certificates, and other particulars supplied by seller remain the intellectual property of the seller and should not be disclosed to any third party without the prior written consent of seller.

Governing Law; Arbitration; Jurisdiction

The terms and conditions of this quotation and any subsequent purchase order shall be construed, interpreted, and performed exclusively according to the laws of the State of Italy.
The courts of such state shall have exclusive jurisdiction out of all controversies arising out of or in connection with this agreement. The parties consent that process may be served upon them in any such action by registered mail at the address stated for Buyer on its purchase order, and upon Zavero at the address noted above in Santa Fe, Texas, or personally within or without the State of Italy. Any legal action with respect to any agreement must be commenced within one year after the cause of action has accrued. The provisions of the Uniform Commercial Code as adopted by the State of Texas, and not under the United Nations Convention on Contracts for the International Sale of Goods, shall apply.

Warranty

All seller's products are guaranteed against defects in workmanship for a period of twelve (12) months after being placed in service, but not exceeding eighteen (18) months after shipment, when products are properly installed per seller specifications and used within the service and pressure range for which they were manufactured. Full risk of loss

0.1 Terms & conditions

shall pass to the buyer upon delivery at FOB point, or destination port in case of CIF. This guarantee is limited to the replacement of any valve parts/components found to be defective either in material or workmanship.
This guarantee does not extend to costs of labor, freight, or any other consequential charges. The unauthorized use of third party components and workmanship in seller's products voids this warranty.

Limitation of Liability

The liability of the seller under this agreement or with respect to any products supplied or services performed pursuant to this agreement, whether in contract, in tort, in strict liability or otherwise, shall not exceed the purchase price paid by the buyer with respect therto. In no event will the seller be liable in contract, in tort, in strict liability or otherwise for any special, indirect, incidental, or consequential damages. This is including but not limited to loss of anticipated profits or revenues, loss of use, non-operation or increased expense of operation of equipment, cost of capital, or claims from customer or buyer for failure or delay in achieving anticipated profits or products.

Cancellation

No contract may be canceled by the buyer except upon written notice to seller and upon payment to seller of all costs incurred by the contract arising out of, or in connection with, the contract. Export of goods covered hereby is subject to United States Customs Control. Standard stocking items will be subject to a twenty-five percent (25%) restocking and/or cancellation charge. Non-standard stocking items will be subject to a one-hundred percent (100%) restocking and/or cancellation charge.

Cancellation Charge

The following indicates the rates of cancellation charge of contract value for project manufactured items and/or special engineered items at various stages of production:

- ***Time of cancellation: Order Acknowledgement and prior to Engineering engagement. Cancellation Charge: 10%***
- ***Time of cancellation: After start of engineering but prior to release to production. Cancellation Charge: 30%***
- ***Time of cancellation: After release to production but prior to completion of fabrication. Cancellation Charge: 80%***
- ***Time of cancellation: After completion of fabrication. Cancellation Charge: 100%***

Return of Goods

No product shall be returned to seller without written authorization and shipping instructions having been obtained from seller. Products authorized for returns are to be shipped freight pre-paid to the SCV Facility identified in writing, unless otherwise notified, and are subject to seller's standard re-stocking fees.

Documentation

MTR's are available at no charge upon request. The seller's standard document package is per ISO 10474 3.1B requirements. Additional requested documentation is subject to charge.

Inspection

The customer or his authorized representative may, with four (4) weeks prior notice given to seller, visually inspect products manufactured by seller. Such seller approved inspections will be carried out in accordance with seller's standard or seller approved customer inspection procedures. If any inspection or documentation requested by the customer is over and beyond the scope and criteria initially agreed to by the seller, any costs incurred by conducting such inspection or preperation of special documents shall be paid by the buyer prior to release of the items for shipment.

Witness Hydro-testing

Witness hydro-testing is available at a cost. A scope of buyers inspection request is to be provided to seller at order placement. Late notice of such requested inspection is subject to additional costs. The cost associated with such witness hydro request is to be agreed on prior to any such testing taking place. Payment of this type of testing to be negotiated. Additionally, any costs associated with a third party inspector will not be at the sellers expense.

Factories & Offices : Via dei Martiri 121/B, 28078 Romagnano Sesia (NO) ITALY
Phone +39 0163 41 13 37 Fax +39 0163 41 13 22
info@zavero.com - manager contact: roberto.castiglioni@zavero.com

www.zavero.com